HSR-JR620-1700 工业机器人
HSR-JR620-1700 Industrial Robot
电气操作维护手册
Electrical Operation Maintenance Manual

V23.1.0

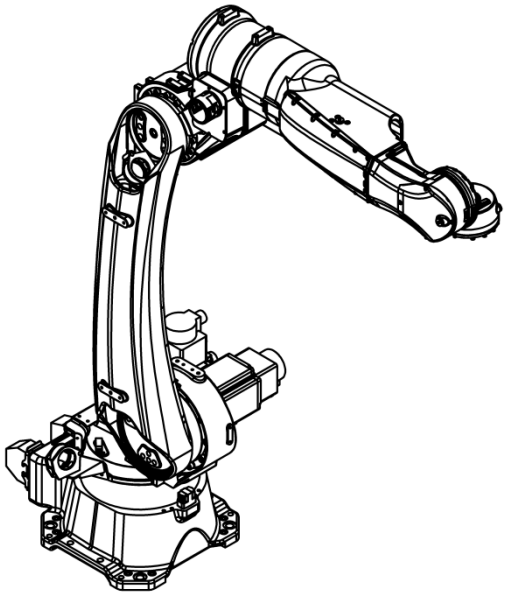

重庆华数机器人有限公司

Chongqing Huashu Robotics Co., Ltd.

本手册所含内容若有变更，恕不另行通知。本手册所含内容不可视作华数的承诺；华数对本手册可能出现的任何错误不承担责任。

Contents of this Manual are subject to change without prior notice. Contents contained in this Manual can't be regarded as guarantee from Huashu Robot; Huashu Robot bears no responsibility to any potential error of this Manual.

华数对本文档及其所含信息保留所有权利。未经明确许可，严禁复制、使用本文档或将其内容透露给第三方。

Huashu Robot reserves all rights to this document and the information contained therein. Copying, using or disclosing the contents of this document to third parties without express permission is strictly prohibited.

前言

PRELIMINARY

本系列说明书介绍了 HSR-JR620-1700 工业机器人的电气组成及各部分的功能和示教器、伺服驱动器故障代码说明及处理对策等，是用户快速学习和使用的基本说明书。本说明书的更新事宜，由华数机器人有限公司授权并组织实施。未经本公司授权或书面许可，任何单位或个人无权对本说明书内容进行修改或更正，本公司概不负责由此而造成的客户损失。

Manuals in this series introduce electrical composition and functions of each part of industrial robot HSR-JR620-1700, and failure codes instructions and treatment countermeasures of the teaching device and servo drivers, and are basic explanations for users to learn quickly and use. The updating of this manual is authorized and implemented by Huashu Robotics Co., Ltd. Without the authorization or written permission of the company, no entity or individual has the right to modify or correct the contents of this manual, and the Company shall not be responsible for the loss of customers caused thereby.

HSR-JR620-1700 工业机器人用户说明书和伺服驱动故障代码说明及处理对策中，我们将尽力叙述各种与该型号机器人操作相关的事件。由于篇幅限制及产品开发定位等原因，不能也不可能对系统中所有不必做或不能做的事件进行详细的叙述。因此，本说明书中没有特别描述的事件均可视为“不可能”或“不允许”的事件。

In this user manual of industrial robot HSR-JR620-1700 and servo drives failure code instructions and treatment

countermeasures, we will do our best to state all events related to the operation of robot of this type. We can't present all the events that need not or cannot be done in detail of this system due to space limit, product development positioning, etc. Therefore, in this manual, all events without particular description should be regarded as “Impossible” or “Prohibited”.

此说明书的版权归华数机器人有限公司，任何单位与个人进行出版或复印均属于非法行为，我公司将追究其法律责任。

The copyright of this manual belongs to Huashu Robotics Co., Ltd. Publishing or copying from any entity or individual is illegal, and our company will investigate its legal liability.

版本修订说明

Revision History

版本号 **Version No.**	描述 **Description**
V22.1.1	电气说明独立分册， **Electrical instructions separated into an independent manual** 增加电源 V1 供用户使用功率，增加电气原理图，增加版本修订说明； **The power of power supply V1 at user end added; electrical diagram added; revision history added;** 删除华中 IO 说明 。 **Description of Huazhong IO deleted**
V22.1.2	变更章节 2.1.2，删除 RA 驱动说明 **Section 2.1.2 changed; description of RA driver deleted** 增加 RD 驱动说明 **Description of RA driver added**

目录
Contents

目录 Contents 1

安全 Security 1

1.1 机器人安全使用须知 Robot Safe Use Instructions 1

1.1.1 操作调试机器人时的安全注意事项 Precautions during Robot Commissioning .. 2

1.1.2 机器人本体的安全对策 Security Countermeasures of Robot Body 6

1.1.3 试车安全对策 Trial Run Safety Countermeasures 12

1.1.4 自动运转的安全对策 Safety Countermeasures for Automatic Operation 13

1.2 以下场合不可使用机器人 No-use Conditions 15

1.3 安全操作规程 Safety Operation Instructions 16

1.3.1 操作前准备 Preparation before Operation 16

1.3.2 示教和手动机器人 Teaching and Manual Robot 17

1.3.3 生产运行 Production and Operation 18

1.3.4 关闭机器人 Shutdown 19

2 电控系统 Electronic Control System 20

2.1 控制柜 Control Cabinet 21

2.1.1 控制器 Controller 23

2.1.2 伺服驱动器 Servo Driver 24

2.1.3 IO 单元 IO Unit 27

2.1.4 EtherCAT 总线回路 EtherCAT Bus Circuit 30

2.1.5 操作指示面板 Operation Indicator Panel 31

2.1.6 断路器 Breaker 32

2.1.7 控制电源 Control Power Supply 33

2.1.8 继电器 Relay 34

2.2 示教器 Teaching Device 35

2.3 本体-控制柜连接线缆 Body- Control Cabinet Connecting Cable 37

2.4 本体信号线 Body Signal Cable 39
3 快速操作入门 Operation Quick Start 41
3.1 上电准备 Ready for Power 41
3.2 系统上电 Energize the System 42
3.3 手动模式选择 Select Manual Mode 42
3.4 坐标系选择 Select Frame 44
3.5 手动速度调整 Adjust Speed Manually 45
3.6 手动使能 Manual Enabling 45
3.7 轴操作 Shaft Operation 46
3.8 系统下电 Power-off the System 47
4 检修及维护 Overhaul and Maintenance 48
4.1 检修注意事项 Overhaul Precautions 48
4.2 检修项目 Overhaul Items 49
4.3 更换电池 Replace the battery 53
4.4 零点位置校准 Zero Position Calibration 54
5 IO 单元信号说明 IO Unit Signal Description 59
5.1 IO 信号配置 IO Signal Configuration 59
5.2 IO 外部信号配置 IO External Signal Configuration 60
5.3 IO 电气连接 IO Electrical Connection 62
5.3.1 IO 型号配置 IO Model Configuration 62
5.3.2 雷赛系列配线 Leadshine IO Wiring 62
6 常见示教器报警处理 6. Handling of Common Teaching Device Alarms 65
7 常见伺服驱动单元报警处理 Handling Common Alarms of Servo Driver 71
7.1 故障说明 Failure Explanation 71
7.2 故障及处理 Failure and Handling 74
7.2.1 故障原因及处理 Causes and Treatment of Failure 74
7.3 报警及处理 Alarm and Treatment 102
8 应急处理措施 8 Emergency Response 117
8.1 分离人员与带电体 Separate Victim from Live Part 117
8.2 急救 First-aid Measures 117

9 机器人报废处理 9 Disposal of Waste Robots..... 119

9.1 拆除、报废阶段 Removal and Disposal 119

10.电气原理图 Electrical Diagram..... 120

产品保修卡 Product Warranty Card I

售后服务联系方式 After-sales Service Contact Information.....III

维修记录 Maintenance Record. IV

1. 安全
Security

1.1 机器人安全使用须知
Robot Safe Use Instructions

请完整阅读本手册、《HSR-JH615 安全手册》、《华数 III 型示教器说明书 V1.6.5（03+201）》、《码垛工艺包使用说明》（选配）及其他附属文件方可进行机器人相关的搬运安装、调试运行、检查、维修等工作。

Thoroughly read this Manual, the *Security Manual of HSR-JH615*, *the Instructions of Huashu Type III Teaching Device V1.6.5 (03+201)*, the *Instructions of the Stacking Process Package* (optional) and other attached documents before moving, installing, commissioning, operating, inspecting and maintaining robots.

请在充分掌握设备知识、安全信息以及全部注意事项后，再行使用本产品。本说明书采用下列记号表示各自的重要性。

Please use this product after fully mastering the equipment knowledge, safety information and all attentions. This manual uses the following markers to indicate importance of each part.

表示处理有误时，会导致使用者死亡或者负重伤，且危险性非常高的情形。

It indicates that improper handling can cause death or serious injury to the user, and the risk is very high.

表示处理有误时，会导致使用者死亡或者负重伤的情形。

It indicates that improper handling can cause death or serious injury to the user.

表示处理有误时，会导致使用者轻伤或发生财产损失的情形。

It indicates that improper handling will cause minor injury or property loss to the user.

表示其他重要的情形。

It indicates other important situations.

1.1.1 操作调试机器人时的安全注意事项

Precautions during Robot Commissioning

1）作业人员须穿戴工作服、安全帽、安全鞋等。

1) Operators must wear work clothes, safety helmets, safety shoes, etc.

2）投入电源时，请确认机器人的动作范围内没有作业人员。

2) Before connecting power supply, please make sure that there is no operator within robot's motion range.

3）必须在切断电源后，作业人员方可进入机器人的动作范围内进行作业。

3) Must cut off power supply before operators enter the robot's motion range.

4）若检修、维修、保养等作业必须在通电状态下进行，此时，应该2人1组进行作业。1人保持可立即按下紧急停止按钮的姿势，另一人则在机器人的动作范围内，保持警惕并迅速进行作业。此外，应确认好撤退路径后再行作业。

4) Sometimes, overhaul, maintenance, etc. must be operated with power supply, and these should be operated in pairs. One should be prepared to press the Emergency Stop button and the other should stay alert and operate quickly with caution within the robot's motion range. Besides, the retreat path should be confirmed before operating.

5）手腕部位及机械臂上的负荷必须控制在允许搬运重量以内。如果不遵守允许搬运重量的规定，会导致异常动作发生或机械构件提前损坏。

The load on wrist part and manipulator arm must be controlled within the allowable load limit.

Failure to comply with the rules of allowable load limit will cause abnormal action or premature damage of mechanical components.

6）请仔细阅读“安全注意事项”章节的说明。

6) Please read instructions in chapter "Precautions" in Robot Operation Manual carefully.

7）禁止进行维修手册未涉及部位的拆卸和作业。机器人配有各种自我诊断功能及异常检测功能，即使发生异常也能安全停止。即便如此，因机器人造成的事故仍然时有发生。

7) Disassembling or operating components not mentioned in service manual is prohibited. The robot is equipped with various self-diagnosis and abnormal detection functions, so it can stop safely after an abnormality occurs. Even so, accidents caused by robots still happen occasionally.

机器人灾害以下列情况居多：未确认机器人的动作范围内是否有人，就执行了自动运转；自动运转状态下进入机器人的动作范围内；作业期间机器人突然起动；只注意到眼前的机器人，未注意别的机器人。

The following conditions prevail in robot accidents: execute automatic running without ensuring there's no one within the robot's motion range; enter the robot's motion range in its automatic run mode; the robot moves unexpectedly; and focuses only on the robot in the front and pays no attention to other robots.

上述事故都是由于“疏忽了安全操作步骤”、“没有想到机器人会突然动作”的相同原因而造成的。换句话说，都是由于“一时疏忽”、“没有遵守规定的步骤”等人为的不安全行为而造成的事故。

All the above accidents are caused by "neglecting safe operation steps", " the unexpected action of robot" and other reasons similar to them. In other words, all caused by human unsafe acts like"lapse of attention", "not following the prescribed steps".

“突发情况”使作业人员来不及实施“紧急停止”、“逃离”等行为避开事故，极有可能导致重大事故发生。

"Emergencies" are likely to cause major accidents because its abruptness allows no time for operators to press "Emergency Stop" or "'Escape".

“突发情况”一般有以下几种：

Generally, "Emergencies" include the following cases:

1）低速动作突然变成高速动作。

1) The low-speed action turns into high-speed abruptly.

2）其他作业人员执行了操作。

2) Other operators operates.

3）因周边设备等发生异常和程序错误，启动了不同的程序。

3) Another program starts due to peripheral equipment abnormality and program error.

4）因噪声、故障、缺陷等原因导致异常动作。

4) Abnormal actions due to noise, failure, defects, etc.

5）误操作。

5) Mis-operation.

6）原想以低速再生执行动作，却执行了高速动作。

6) Has intended to perform the action at a low speed, but execute the high speed action.

7）机器人搬运的工件掉落、散开。

7) The workpieces carried by the robot fall and fall apart.

8）工件处于夹持、联锁待命的停止状态下，突然失去控制。

8) The robot runs out of control when the workpiece in clamping, interlock standby stop state.

9）相邻或背后的机器人执行了动作。

9) Robots next to or behind this robot perform the action.

上述仅为一部分示例，还有很多形式的“突发情况”。大多数情况下，不可能“停止”或“逃离”突然动作的机器人，因此应执行下列最佳对策，避免此类事故发生。

The above is just part of examples and there still are "Emergencies" in many other forms. In most cases, it's impossible to "stop" or "escape" the sudden-action robots, so the following countermeasures should be executed to avoid accidents of this kind.

小心，请勿接近机器人。

Caution, keep off the robot.

不使用机器人时，应采取“按下紧急停止按钮”、“切断电源”等措施使机器人无法动作。

When non-use the robot, make it unable to act by pressing "Emergency Stop" button or "Power Cut", etc.

机器人动作期间，请配置可立即按下紧急停止按钮的监视人（第三者），监视安全状态。

During robot action, please configure a monitor (a third party) who can immediately press the Emergency Stop button to monitor safety.

机器人动作期间，应以可立即按下紧急停止按钮的态势进行作业。

The robot must be operated in a condition that the Emergency Stop button can be pressed at any time during its action.

为了遵守这些原则，必须充分理解后述注意事项，并切实遵行。

To comply with these principles, the latter precautions must be fully understood and observed.

1.1.2 机器人本体的安全对策

Security Countermeasures of Robot Body

机器人的设计应去除不必要的突起或锐利的部分,使用适应作业环境的材料，采用动作中不易发生损坏或事故的故障安全防护结构。此外，应配备在机器人使用时的误动作检测停止功能和紧急停止功能，以及周边设备发生异常时防止机器人危险性的联锁功能等，保证安全作业。

重要

The design of robot should remove unnecessary protrusion or sharp part, use materials suitable for the working environment, and adopt the fail-safe protection structure which is not damage-prone or accident-prone in robot action. Besides, to ensure safety, should equip the robot with mis-action detect-stop function and emergency stop function, also interlocking function to prevent risk caused by peripheral equipment.

机器人主体为多关节的机械臂结构，动作中的各关节角度不断变化。进行示教等作业，必须接近机器人时，请注意不要被关节部位夹住。各关节动作端设有机械挡块，被夹住的危险性很高，尤其需要注意。此外，若拆下马达或解除制动器，机械臂可能会因自重而掉落或朝不定方向乱动。因此必须实施防止掉落的措施，并确认周围的安全情况后，再行作业。

警告

Main body of robot is composed of multi-joint manipulator arms, the angles of joints are constantly changing in the action. Be careful not to be clamped by the joint when must approach robot to operate teaching. Mechanical block is set at the action end of each joint, so it is very dangerous to be clamped, please pay particular attention to this. Beside, after the motor is detached or the brake released, the manipulator arm can fall out of self weight or move randomly. So must take measures to prevent falling and check the safety condition of surroundings before operating the robot.

没有固定机械臂便拆除马达，机械臂可能会掉落，或前后移动，请先固定机械臂，然后再拆卸马达。

Fix the manipulator arm before removing the motor because the manipulator arm may fall off or move forward or backward when the motor is removed without fixing the manipulator arm.

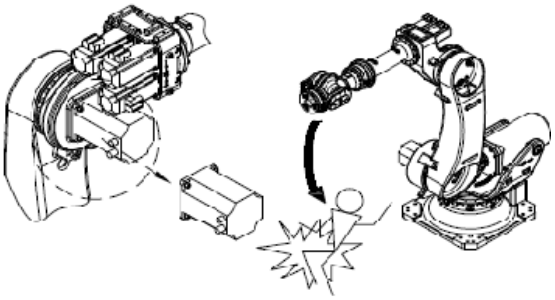

警告

用木块或起重机固定机械臂以防掉落，然后再拆除马达（零点栓和挡块用于对准原位置，不可以用来固定机械。）

Fix the manipulator arm with a wood block or crane to prevent it from falling, and then remove the motor (zero bolt and block are used for alignment and cannot be used for fixation.)

此外，请勿在人手支撑机械臂的状态下拆除马达。

Besides, do not remove the motor when manipulator arm is supported manually.

注意

平衡弹簧装置在正常状态下其内部呈压缩状态，危险性极高，严禁拆卸或分解。（仅限搭载平衡弹簧装置的机型）

Normally, the spring balancer is in compression state and of high risk, so detaching or dismantling is forbidden. (only for robot type with spring balancer)

在终端生效器及机械臂上安装附带机器时，应严格遵守本书规定尺寸、数量的螺栓，使用扭矩扳手按规定扭矩紧固。

When installing the attached machine to the end effector or manipulator arm, please strictly comply with this manual and use bolt of the size and quantity exactly specified in this manual and tighten it with torque wrench to the specified torque.

此外，不得使用生锈或有污垢的螺栓。

In addition, do not use rusty or soiled bolts.

规定外的紧固和不完善的方法会使螺栓出现松动，导致重大事故发生。

Not tightening through specified or improper method will cause the bolt looseness leading to major accident.

设计、制作终端生效器时，应控制在机器人手腕部位的负荷容许值范围内。

When designing and fabricating the end effector, keep the load within the allowable load of the robot wrist.

严禁供应规格外的电力、压缩空气、焊接冷却水，会影响机器人的动作性能，引起异常动作或故障、损坏等危险情况发生。

Supplying off-specification power, compressed air, welding cooling water is forbidden because this will affect the motion performance, cause abnormal action or dangerous situations like failures, damages, etc.

电磁波干扰虽与其种类或强度有关，但以当前的技术尚无完善对策。机器人操作中、通电中等情况下，应遵守操作注意事项规定。由于电磁波、其它噪声以及基板缺陷等原因，会导致所记录的数据丢失。

Although electromagnetic wave interference is related to its kind or intensity, there is no perfect countermeasure with current technology. Comply with the operation cautions when the robot is being operated or energized. The recorded data may get lost due to the electromagnetic wave, other noise, baseplate defects, etc.

因此请将程序或常数备份到闪存卡（compact flash card）等外部存储介质内。

So please backup the program or constant to the external storage media like compact flash card.

大型系统中由多名作业人员进行作业，必须在相距较远处交谈时，应通过使用手势等方式正确传达意图。

In a large system with multiple operators working simultaneously, when operators need to the communicate over long distance, they should use manners like gestures to convey their real intention.

环境中的噪音等因素会使意思无法正确传达，而导致事故发生。

Factors like noise in the environment will undercut the communication, and cause accidents.

产业用机器人手势法（示例）

注意

Industrial Robot Gestures (Sample)

作业人员在作业中，也应随时保持逃生意识。

注意

Operators should always be ready to escape from danger during operation.

必须确保在紧急情况下，可以立即逃生。

So they can escape from danger in case of emergency.

时刻注意机器人的动作，不得背向机器人进行作业。

Always focus on the action of robot and can't operate back to the robot.

对机器人的动作反应缓慢，也会导致事故发生。

Slow reaction to the robot action can also cause accidents.

发现异常时，应立即按下紧急停止按钮。

Press Emergency Stop as soon as abnormality occurs.

必须彻底贯彻执行此规定。

This clause must be strictly carried out all the time.

应根据设置场所及作业内容，编写机器人的启动方法、操作方法、发生异常时的解决方法等相关的作业规定和核对清单。

Draft the regulations and checklists of starting methods, operating methods, solutions to abnormality, etc. of the robot depending on the place of setting and operation content.

并按照该作业规定进行作业。

And operate according to the regulations.

仅凭作业人员的记忆和知识进行操作，会因遗忘和错误等原因导致事故发生。

Operating only by memories or knowledge of operators will lead to accidents due to their forgetting and mistakes.

不需要使机器人动作和操作时，请切断电源后再执行作业。

When the robot is not required to move or act, please cut off power supply to continue the operation.

示教时应先确认程序号码或步骤号码，再进行作业。

Before teaching, confirm the number of program or step. Then, continue the operation.

错误地编辑程序和步骤，会导致事故发生。

Wrongly edit the program or steps will cause accidents.

对于已完成的程序，使用存储保护功能，防止误编辑。

Use storage protection function to protect the completed program and avoid mis-editing.

示教作业结束后，应进行清扫作业，并确认有无忘记拿走工具。作业区被油污染，遗忘了工具等原因，会导致掉落等事故发生。

After the teaching operation completed, should operate cleaning and make sure all tools have been taken. Oil pollution and tools left in operation area will cause accidents like slipping.

确保安全首先从整理整顿开始。

Ensure safety from cleaning up.

1.1.3 试车安全对策

Trial Run Safety Countermeasures

试车时，示教程序、夹具、序列器等各种要素中可能存在设计错误、示教错误、工作错误。因此，进行试车作业时必须进一步提高安全意识。

During trial run, errors in design, teaching and working can occur in all sectors like teaching program, clamp, sequencer, etc. So, the safety consciousness must be further improved during the trial run.

请注意以下各点：

Please pay attention to following points:

1）首先，确认紧急停止按钮、保持/运行开关等用于停止机器人的按钮、开关、信号的动作。一旦发生危险情况，若无法停止机器人将无法阻止事故的发生。

1) First, check buttons, switches and signals used to stop the robot, like Emergency Stop button, hold/start switch, etc. In an emergency, the accident cannot be avoided if the robot cannot be stopped.

2）机器人试车时，首先请将速度超控设定为低速（5%～10%左右），实施动作的确认。以2～3周期左右，反复进行动作的确认，若发现有问题时，应该立即修正。之后，逐渐提高速度（50%～70%～100%），各以2～3周期左右，反复作确认动作。

2) In the beginning of trial run, please set the over-speed control to low speed (about 5% ~ 10%) , then confirm the action. Repeat the confirm of motion for 2 or 3 cycles, and fix the problem immediately (if any). Then, increase the speed gradually (from 50% to 70% to 100%), and repeatedly confirm the action by 2 or 3 cycles each.

1. 1. 4 自动运转的安全对策

Safety Countermeasures for Automatic Operation

作业开始/结束时，应进行清扫作业，并注意整理整顿。

Before or after the operation, clean up and pay attention to tidy up.

作业开始时，应依照核对清单，执行规定的日常检修。

Before the operation, carry out the routine overhaul according to the checklist.

请在防护栅的出入口，挂上“运转中禁止进入”的牌子。此外，必须贯彻执行此规定。

Please put up "No Entry in Operation" on the entrance and exit of the safety fence. Besides, this clause must be implemented thoroughly.

自动运转开始时，必须确认防护栅内是否有作业人员。

Before the automatic operation, check the safety fence for any operator.

自动运转开始时，请确认程序号码、步骤号码。操作模式、起动选择状态处于可自动运转的状态。

Confirm the number of program and steps at the beginning of automatic operation. Select operation mode and starting mode suitable for automatic operation.

自动运转开始时，请确认机器人处于可以开始自动运转的位置上。此外，请确认程序号码、步骤号码与机器人的当前位置是否相符。

Make sure the robot is on the suitable position for automatic operation. Besides, please make sure the number of program and steps are suitable for the current position of robot.

自动运转开始时，请保持可以立即按下紧急停止按钮的态势

When the automatic operation starts, please prepare yourself to press the Emergency Stop button at any time

请掌握正常情况下机器人的动作路径、动作状况及动作声音等，以便能够判断是否有异常状态。

Please be familiar with the path, condition and sound of the robot's normal motion, so as to identify the abnormal state.

1.2 以下场合不可使用机器人

No-use Conditions

机器人不适合以下场合使用：

This robot is not applicable to the following conditions:

1）燃烧的环境。

1) Burning conditions.

2）有爆炸可能的环境。

2) Explosive conditions.

3）无线电干扰的环境。

3) Radio inference conditions.

4）水中或其他液体中。

4) In water or other liquids.

5）运送人或动物。

5) In delivery of human or animal.

6）不可攀附。

6) Unattachable.

其他。

Others.

1.3 安全操作规程

Safety Operation Instructions

进入机器人工作区域，必须按下控制柜或示教器急停按钮，悬挂相应工作警示牌，关好相应防护栏安全门，方可进行相应机器人作业。

After entering the robot operation area, must press the Emergency Stop of control cabinet or teaching device, hang up the relevant warning board, close the door of safety fence, then can start the robot operation.

1.3.1 操作前准备

Preparation before Operation

1）请勿带手套操作示教器；

1）Operate teaching device without a glove;

2）操作人员必须熟知我司机器人的机械、电气性能，熟悉 Hpad-201 示教器的使用和操作注意事项；

2) Get familiar with the mechanical and electrical performance of our robot and the precautions for use and operation of Hpad-201 teaching device;

3）操作人员必须经过我司机器人操作专业培训合格后方可操作；

3) Before operation, operators must pass the professional training of our company's robot operation;

4）检查各部件（电器、机械）是否正常，查看控制柜和本体铭牌的出厂编号一致，确认示教器与控制柜及本体与控制柜的线缆连接正确、正常，确保控制柜的供电电源及配线正确；

4) Check all parts (electrical appliances and machinery), check the factory number of the control cabinet and the nameplate of the body is consistent, confirm the proper and normal connection between control cabinet and teaching device/body, and check the power supply and wiring of the control cabinet;

5）确保机器人周围区域清洁，控制柜离墙面及固定物具有足够的散热、维修空间，无

油、水及杂质等；

5) Ensure that the robot-surrounding is clean, and there's enough space for heat dissipation and maintenance between control cabinet and the wall or fixed objects, and there is no oil, water and impurities, etc.;

6）必须知道所有会引起机器人移动的开关、传感器和控制信号的位置和状态；

6) Must know the position and status of all switches, sensors and control signals that may affect robot's motion;

7）必须知道机器人控制器和外围控制设备上的紧急停止按钮的位置，以备紧急情况下停止机器人运行。

7) Must know the position of "Emergency Stop" button in the robot controller and peripheral control equipment and prepare to press in emergency.

1.3.2 示教和手动机器人

Teaching and Manual Robot

1）开启控制柜的主开关，确认控制柜各指示灯是否正确；

1) Switch on the main control and check indicator of control cabinet;

2）手动低速操作机器人各轴（以 5%的速度运行），确认各轴零点、旋转方向及软限位是否正常；

2) Manually control each shaft to move at low speed (by 5% speed), check the zero, direction of rotation and soft limit;

3）手动模式下操作机器人时，要采用较低的修调速度以增加对机器人的控制机会；

3) When operate the robot in manual mode, adopt a relatively low trimming speed to increase the control of robot;

4）在按下示教器上的点动按键之前，要考虑到机器人的运动趋势；

4) Project the motion trend before press the jog button on teaching device;

5）要预先考虑好避让机器人的运动轨迹，并确认该线路不受干涉；

5) Verify the motion trail in advance, and make sure this trail will not be interfered;

6）在使用时，如遇停电而导致动作停止一半而停止，需要立即关闭控制柜上电源开关，等恢复电源后方可开电源使用；

6) During use, if the motion is stopped by a power failure, cut the power switch in control cabinet immediately, and turn on the switch after the power is resumed;

7）使用中，如遇故障必须停电进行排除故障，严禁自行拆解维修，及时通知相关调试人员。

7) During use, any failure must be handled by relevant commissioning operators with the power off, and any dismantling by amateur is forbidden.

1.3.3 生产运行

Production and Operation

1）生产运行严禁开机后直接进入高速自动状态；

1) It is strictly prohibited to enter the high-speed automatic state after starting up the production operation;

2）自动运行程序前，必须确认机器人零位与各程序点正确，低速（以 5%的速度）手动单步运行到程序末点，确认程序运行无误后，方可进入自动模式；以低速（以 5%的速度）自动运行一遍后，方可进入高速运行；

2) Before automatic running of the program, be sure to check the zero and other program points. Manually move the robot to the program ending point by single-step running at a low speed (5% speed) and ensure that the program runs correctly. Then switch to automatic mode; after one automatic run at a low speed (5% speed), switch to high-speed mode;

3）自动运行程序前，必须知道机器人所执行程序的整个流程及动作；

3) Before automatically running the program, must know the whole procedure and all motions of the program to be executed;

4）必须知道所有会引起机器人移动的开关、传感器和控制信号的位置和状态；

4) Must know the position and status of all switches, sensors and control signals that may affect robot's motion;

5）永远不要认为机器人没有移动就说明其程序已经执行完毕，此时机器人很有可能是在等待使其继续移动的输入信号；

5) Never regard the no-motion of robot as the completion of program, because in this condition, the robot can be waiting for new input signal to move;

6）必须知道机器人控制器和外围控制设备上的紧急停止按钮的位置，以备紧急情况下停止机器人运行；

6) Must know the position of "Emergency Stop" button in the robot controller and peripheral control equipment and prepare to press in emergency;

7）带载运行应确保安装负载后不超过机械操作维护手册中规定的手腕部分负荷允许值，并确保安装螺钉全部安装到位，方可运行机器人。

7) When operate with load, make sure the installed load is not more than the allowable load limit of wrist part prescribed in the mechanical operation and maintenance manual, and make sure all screws are installed properly, then can run the robot.

1.3.4 关闭机器人

Shutdown

1）停止运行中的机器人，务必先暂停或停止运行程序，特别注意停止机器人刚好处于外围设备范围内或离外围设备较近时，务必低速手动运行机器人至安全区域，严禁直接自动运行程序或点击自动移动至点操作；

If want to stop the running robot, must pause or stop the running program at first, and pay special attention to this: when the robot will be stopped in or close to peripheral equipment, must manually move the robot to the safe area at first, and automatically running the program or selecting the automatic move-to-point is forbidden;

2）关闭机器人使能，切换至手动模式下，确保机器人手动安全运行至安全区域，按下控制柜或示教器急停按钮；

To close the robot Enable: first switch to the manual mode, manually move the robot to safe area, press the Emergency Stop of control cabinet or teaching device;

3）将电源开关置于 OFF 状态，确保控制柜相应断路器断开，并将上一级配电断路器断开，设置相应防护措施，防止误将相应断路器接通。

Turn OFF the power switch, make sure the control cabinet or breaker has been cut off, and disconnect the distributor breaker at the upper level, set corresponding precautions to prevent the breaker from being connected.

2 电控系统
Electronic Control System

HSR-JR620-1700工业机器人系统连接如图2-1所示，电控系统核心部件主要包括：控制器、伺服驱动器、IO单元、隔离变压器、开关电源、示教器、动力/抱闸线缆、编码器线缆和伺服电机（含绝对式编码器）等，其中控制器、伺服驱动器、IO单元、电子变压器和开关电源安装于控制柜内；动力/抱闸线缆和编码器线缆共同组成本体—控制柜连接线缆；6台伺服电机分别装载于机器人本体的六个关节处。电控系统采用电压AC380V(±10%、3P+N+PE)，频率50Hz(±1%)的电源进行供电，建议供电电缆采用5×4mm ²电缆进行配线。

Diagram 2-1 shows the system connection of HSR-JR620-1700 industrial robot. The core components of its electronic control system include controller, servo driver, IO unit, isolation transformer, switching power supply, teaching device, power/brake cable, encoder cable and servo motor (with absolute encoder), etc. The controller, servo driver, IO unit, electronic transformer and switching power supply are installed in control cabinet. The power/brake cable and encoder cable jointly form the body-control cabinet connecting cable. 6 servo motors are installed on the six joints of the robot body respectively. The electronic control system is powered by AC380V (±10%, 3P+N+PE), 50Hz (±1%) power supply. It is recommended to use 5×4mm ²cable as the supply cable.

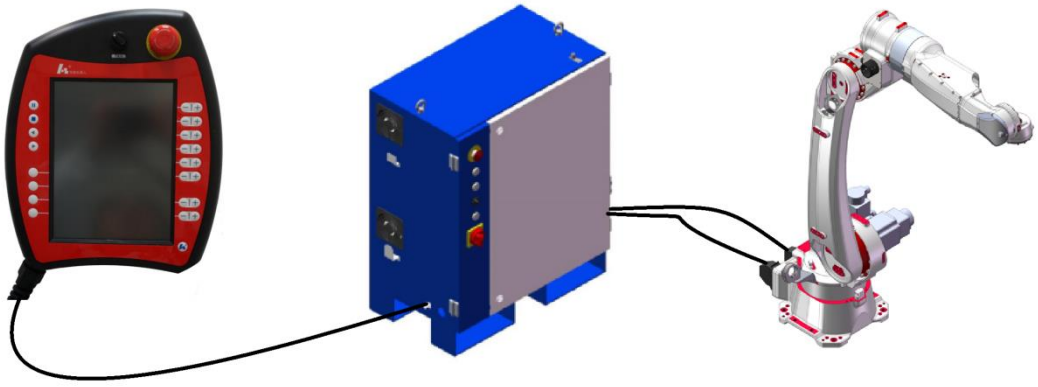

④ ③ ② ①

①机器人本体 ②本体—控制柜连接线缆 ③控制柜 ④HSpad-03 示教器（含连接线）

①Robot body ②Body-control cabinet connecting cable ③Control cabinet ④HSpad-03 techning

device (including connecting cable)

图 2-1 机器人系统连接图

Diagram 2-1 System Connection of Robot

2.1 控制柜

Control Cabinet

HSR-JR620-1700 工业机器人控制柜整体设计上采用直观、方便、稳固的设计理念，为使机器人在使用过程中保证稳定，可靠以及安全地运行，控制柜柜体采用了硬度以及耐久度极高的钢板为原材料，配合镀锌工艺，保证控制柜柜体在满足硬度要求的同时，具有抗腐蚀，耐磨损，稳定可靠的保护功能。控制柜内主要安装有控制器、伺服驱动器、IO 单元、隔离变压器、开关电源、断路器、接触器、接线端子、继电器、电源开关、急停按钮、指示灯、扇热风扇及重载连接器等电器件。控制柜外形及柜内布置如图 2-2~图 2-4 所示。

The control cabinet of HSR-JR620-1700 industrial robot is designed with the concept of visualization, convenience and stability, to ensure the stable, reliable and safe running of the robot; the control cabinet adopts steel plate with high hardness and durability as raw material and is galvanized to meet the required hardness, and boasts corrosion resistance, wear resistance, stability and reliability. Electrical parts installed in the control cabinet are controller, servo driver, IO unit, isolation transformer, switching power supply, breaker, contactor, terminal, relay, power switch, Emergency Stop button, indicator, cooling fan, heavy duty connector, etc. Diagrams 2-2 - 2-4 show the appearance and internal configuration of the control cabinet.

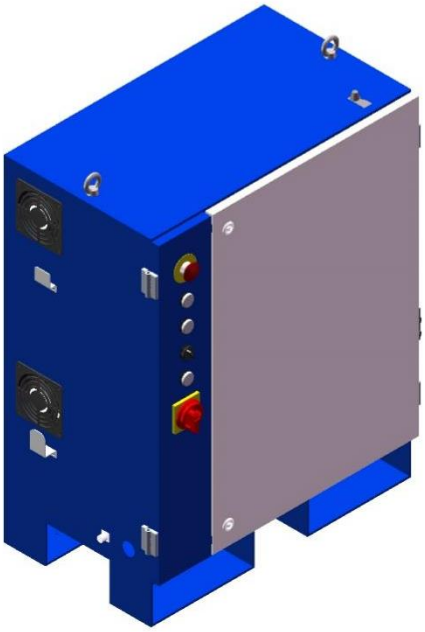

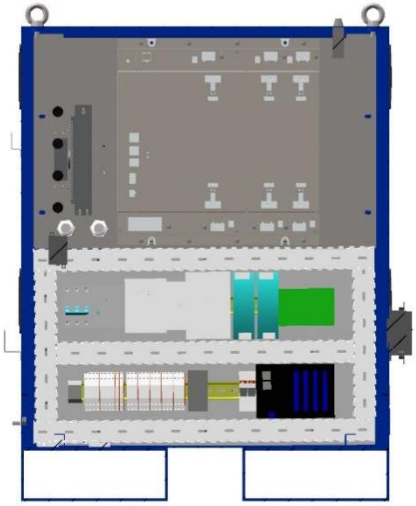

图 2-2 控制柜外观 图 2-3 控制柜内部视图

Diagram 2-2 Control Cabinet Appearance Diagram 2-3 Internal View of Control Cabinet

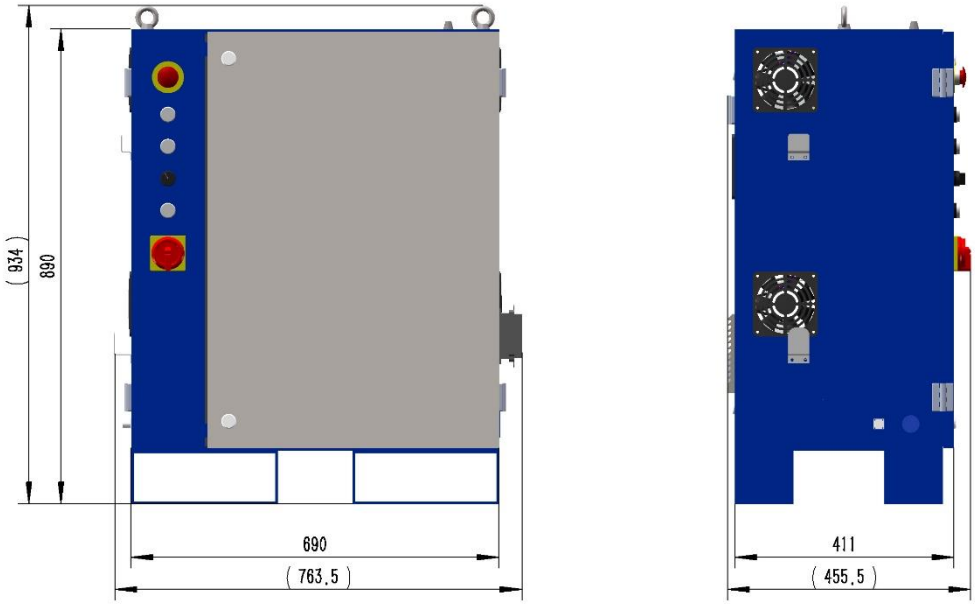

图 2-4 控制柜外形尺寸

Diagram 2-4 Control Cabinet Boundary Dimension

2.1.1 控制器

Controller

HNC-808iR 控制器相当于人的大脑，所有程序和算法都在 HNC-808iR 中处理完成。该产品采用开放式、模块化的体系结构，以嵌入式工业计算机为平台，搭载实时 Linux 系统，集成了高效的机器人运动控制算法，提供了先进的故障诊断机制。受益于开放式现场总线 EtherCAT 协议，本系统最大可支持 3 个外部同步轴，并可扩展非限制非同步外部轴。该控制器主要适用于 PUMA、DELTA、SCARA 等标准结构的机器人以及 Traverse、Scissors 等非标准机器人的控制。

HNC-808iR controller is like human brain and all programs and algorithms are processed in HNC-808iR. The product adopts an open and modular architecture, takes embedded industrial computer as platform, carries real-time Linux system, integrates efficient robot motion control algorithm, and provides advanced failure diagnosis mechanism. Benefiting from the EtherCAT protocol, an open field bus, this system can support up to 3 external synchronizing shafts and extend external unrestricted asynchronous shafts. The controller mainly applies to controlling robots with standard structures such as PUMA, DELTA and SCARA, and non-standard robots such as Traverse and Scissors.

HNC-808iR 控制器外观如图 2-5 所示，其接口丰富，包含 NCUC 总线接口、EtherCAT 总线接口、标准以太网接口、VGA 接口、USB 接口等，方便用户扩展，HNC-808iR 控制器接口描述详见表 2-1。

The appearance of HNC-808iR controller is shown in diagram 2-5. It provides various interfaces, including NCUC bus interface, EtherCAT bus interface, standard Ethernet interface, VGA interface, USB interface, etc., to facilitate user expansion. See Figure 2-1 for details of HNC-808iR controller interface description.

图 2-5 HNC-808iR 控制器

Diagram 2-5 HNC-808iR Controller

表 2-1 HNC-808iR 控制器接口

Figure 2-1 HNC-808iR Controller Interface

	接口名称 Name of interface	描述 Description
1	电源接口 Power interface	5 Pin 插座，24V 电源输入，带 AC_F 信号 5 Pin socket, 24V power input, with AC_F signal
2	USB 接口 USB interface	USB 3.0 X 2
3	LAN 口 LAN interface	1000M bps 千兆网口 X 2 1000M bps GigE interface X 2
4	VGA 口 VGA interface	标准 VGA X 1 Standard VGA X 1
5	NCUC 总线接口 NCUC bus interface	IEEE1394-6 X 2

2.1.2 伺服驱动器

Servo Driver

伺服驱动器是用来控制伺服电机的一种控制器，应用于高精度的传动系统定位。伺服驱动单元采用了清能德创电气技术（北京）有限公司推出的新一代高性能伺服产品 CoolDrive RD 系列（电压等级 200V）。具有高性能、大功率、定制化等优势。凭借多轴模块化集成设计，为客户提供灵活的轴容量及功能定制，满足工业机器人、金属加工及激光切割等行业对

高性能大功率伺服的定制化需求。

Servo driver is a controller used to control servo motors, and can be applied to driving system positioning with high accuracy. The servo driver unit comprises the new-generation high-performance CoolDrive RD series servo product (200V) launched by Tsino-Dynatron Electrical Technology (Beijing) Co., Ltd. Therefore, it provides high performance, strong power, customizability and other advantages. Based on multi-axis modular integrated design, it enables customers to flexibly customize the number of axes and functions to satisfy the customization requirements of industrial robot, metal processing, laser cutting and other industries for high-performance apowerful servos.

外观如图 2-6 所示，伺服驱动单元连接原理示意图如 2-7 所示。

Diagram 2-6 shows the appearance of the servo driver unit. Diagram 2-7 shows the wiring of the unit.

图 2-6 RD 伺服驱动单元外观图

Diagram 2-6 Appearance of RD Servo Driver Unit

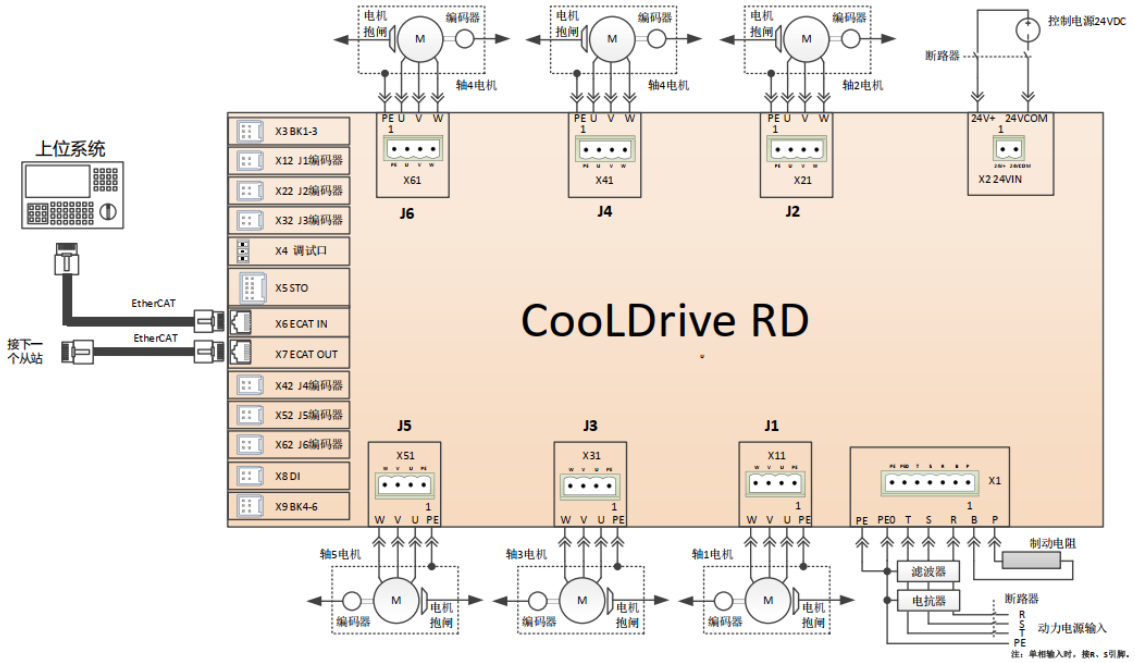

图 2-7 RD 伺服驱动单元连接原理示意图

Diagram 2-7 Wiring of RD Servo Driver Unit

RD 驱动急停信号的电气连接如图 2-8 所示。

The electrical connection of emergency stop signal of RD driver is shown in Diagram 2-8.

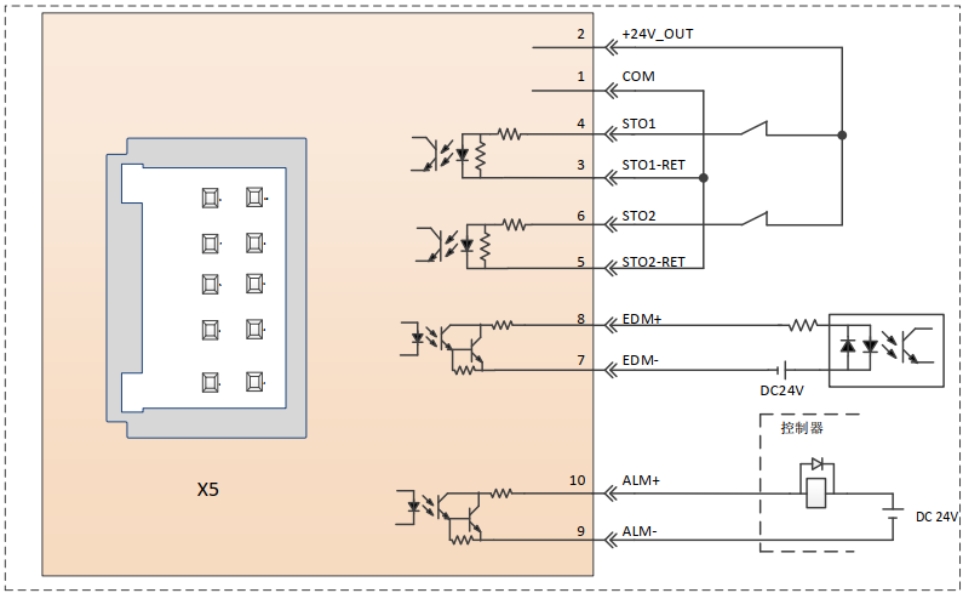

图 2-8 RD 驱动急停信号的电气连接图

Diagram 2-8 Electrical Connection of Emergency Stop Signal of RD Driver

驱动模块编码器接口 X12/X22/X32/X42/X52/X62 与多摩川绝对编码器电气连接引脚定义如图 2-9 所示。

Diagram 2-9 shows the definition of the electrical connection pins in the encoder interfaces X12/X22/X32/X42/X52/X62 of driver module and Tamagawa absolute encoder.

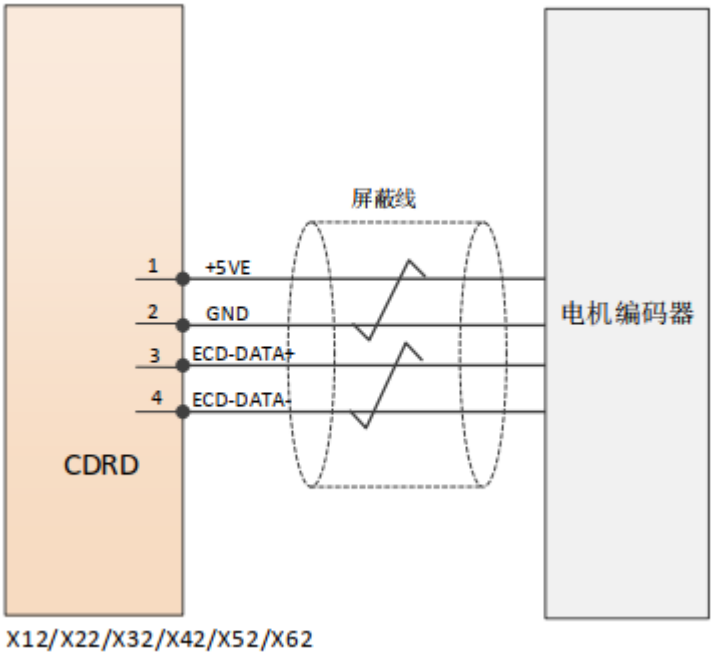

针脚 3：SD+（信号+） 针脚 4：SD-（信号-） 外壳：屏蔽层

Pin 3: SD+ (signal+) Pin 4: SD- (signal-) Enclosure: shielding layer

针脚 1：5V（电源正） 针脚 2：GND（电源负）

Pin 1: 5V (power+) Pin 2: GND (power-)

图 2-9 驱动模块编码器接口 X12/X22/X32/X42/X52/X62 和多摩川绝对式编码器电气连接图

Diagram 2-9 Electrical connection of the encoder interfaces X12/X22/X32/X42/X52/X62 of driver module and Tamagawa absolute encoder

2.1.3 IO 单元

IO Unit

雷赛 EM64DX-E1 模块是一款基于 ASIC 技术的高性能、高可靠性的 EtherCAT 总线 IO 扩展模块，具有 32 路通用输入接口和 16 路通用输出接口以及 16 路双通道输入输出

接口。输入输出接口均采用光电隔离和滤波技术，可以有效隔离外部电路的干扰，以提高系统的可靠性。

Leadshine EM64DX-E1 module is an EtherCAT bus IO expansion module based on ASIC with high performance and reliability. It has 32 general input interfaces, 16 general output interfaces and 16 two-channel input and output interfaces. Optoelectronic isolation and filtering technologies are applied to input and output interfaces to effectively isolate interference from external circuits and improve system reliability.

功能描述：

Description of function:

- 32 路通用输入：提供光电隔离、抗干扰滤波。

  32 general inputs: provide optoelectronic isolation and anti-interference filtration.

- 16 路通用输出：提供光电隔离、抗干扰滤波。

  16 general outputs: provide optoelectronic isolation and anti-interference filtration.

- 16 路双通道输入输出（可配置为 16 路输入或 16 路输出）：提供光电隔离、抗干扰滤波。

  16 two-channel inputs and outputs (may be configured as 16 inputs or 16 outputs): provide optoelectronic isolation and anti-interference filtration.

- 内部 24V 隔离电源，具有直流滤波器。

  Equipped with an internal 24V isolated power supply with a DC filter.

- 铁壳安装， 插拔式接线端子，支持螺丝安装和导轨安装支持数字输入输出模块、模拟输入输出模块。

  Installed through the steel shell. Equipped with plug-in terminals. Support installation via screws and rails. Support digital input and output modules and analog input/output modules.

雷赛 EM64DX-E1 IO 扩展模块提供 32 路输入接口、16 路输出接口以及 16 路双通道输入输出接口（可进行拨码定义输入输出类型，出厂默认输出），带有两个立式 RJ45 型 EtherCAT 扩展口。

Leadshine EM64DX-E1 IO expansion module provides 32 input interfaces, 16 output interfaces and 16 dual-channel input and output interfaces (configurable as input or output interfaces through DIP

switch; configured as output interface by default) and two vertical RJ45 EtherCAT expansion interface.

表 2-2 雷赛 EM64DX-E1 总线式 IO 单元接口功能简述

Figure 2-2 Function Overview of Interfaces of Leadshine EM64DX-E1 Bus IO Unit

类型 **Type**	**子模块名称** **Sub-module name**
电源 Power supply	直流 24V 电源输入 AC 24V power input
ECAT IN	EtherCAT 总线 IN 接口 EtherCAT bus IN interface
ECAT OUT	EtherCAT 总线 OUT 接口 EtherCAT bus OUT interface
X1/X2	通用输入端口 General input port
X3	通用输出端口 General output port
X4	输入输出两用端口（由拨码开关决定，出厂默认输出） Dual-channel input and output port (configurable through DIP switch; configured as output port by default)
拨码开关 DIP switch	输入输出两用端口的配置开关 Switch used to configure the dual-channel input and output ports
旋钮开关 Knob switch	模块 ID 号 Module ID number

雷赛 IO 单元外观如图 2.10 所示（出厂标配雷赛 IO）。

Diagram 2.10 shows the appearance of Leadshine IO unit (standard configuration in factory).

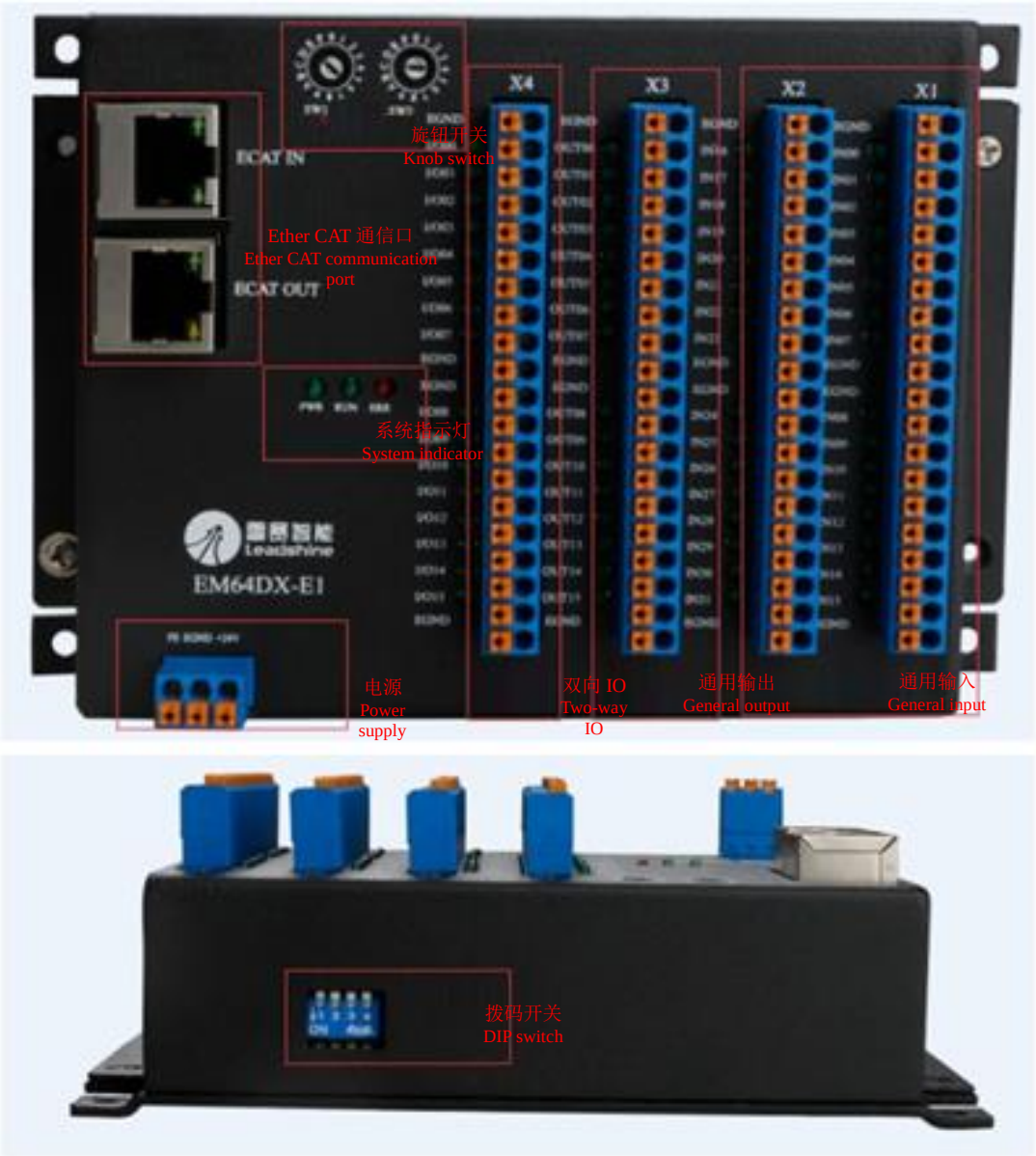

图 2-10 雷赛 EM64DX-E1 总线式 IO 单元接口分布

Diagram 2-10 Distribution of interfaces on Leadshine EM64DX-E1 bus IO unit

2. 1. 4 EtherCAT 总线回路

EtherCAT Bus Circuit

控制器、伺服驱动单元及 IO 单元之间采用高速工业以太网 EtherCat 总线接口进行网络通讯，实现数据的高速交互，其 EtherCat 总线网络回路如图 2-11 所示。

High-speed industrial Ethernet EtherCat bus interface is used for communication among the controller, servo driver and IO unit to realize high-speed data interaction. The EtherCat bus network

circuit is shown in Diagram 2-11.

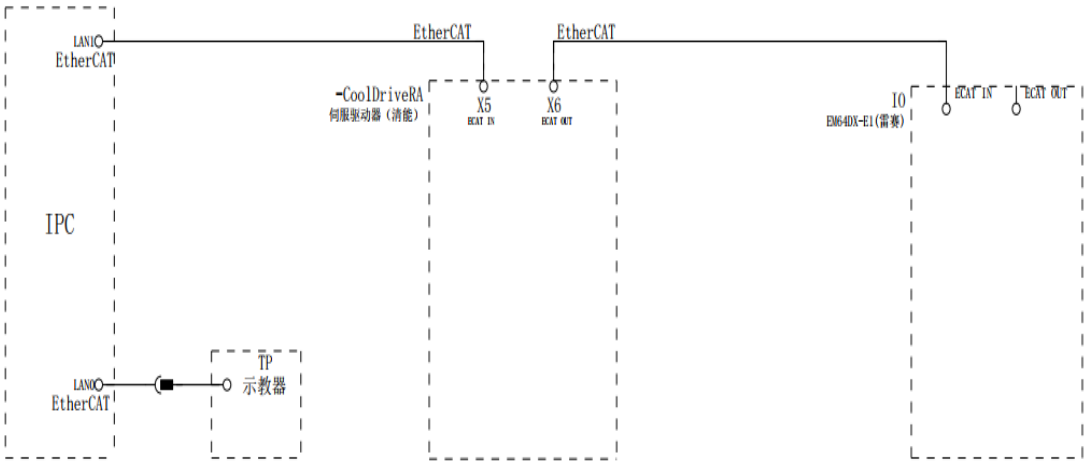

图 2-11 EtherCAT 总线网络

Diagram 2-11 EtherCAT bus network

2.1.5 操作指示面板

Operation Indicator Panel

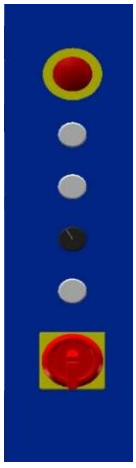

图 2-12 控制柜操作指示面板布置图

Diagram 2-12 control cabinet operation indicator panel layout

电源指示灯：一次回路和二次回路供电指示。

Power indicator: Primary and secondary circuit power supply indicator.

报警指示灯：系统及驱动器故障报警指示。

Alarm indicator: System and driver failure alarm indicator.

运行指示灯：机器人在自动运行时，此指示灯亮起。

Operation indicator: This indicator is on when the robot is automatically operating.

示教器开关：示教器电源开关，打开时示教器得电；运行时关闭取下示教器，机器人也能正常运行。

Teaching device switch: This is the teaching device power switch. When it is turned on, the teaching device will be electrified. When it is turned off and the teaching device is removed, the robot will continue to operate normally.

急停按钮：紧急情况下压下此按钮，抱闸抱住电机轴，同时断掉伺服使能信号。

Emergency Stop button: Press this button in case of emergency. The brake holds the motor shaft and breaks the servo enable signal at the same time.

电源开关：控制控制柜与外部 380V 电源通断，打开时控制柜内器件得电。

Power switch: control the connection between control cabinet and the external 380V power supply. After this switch is turned on, the devices inside the control cabinet are energized.

2.1.6 断路器

Breaker

断路器(QF1)：断路器（32A）QF1 用于控制 3 相四线制（3P+N）AC380V 电源供电及对后续电路进行短路保护，进行设备维护及检修时，请务必将此断路器置断开位置。

Breaker (QF1): Breaker (32A) QF1 is used to control the incoming line of 3-phase four-wire AC380V power supply (3P+N) and to protect the downstream circuits from being short-circuited. Please be sure to disconnect this breaker before equipment maintenance and overhaul.

图 2-13 断路器

Diagram 2-13 Circuit Breaker

2.1.7 控制电源

Control Power Supply

机器人控制柜采用 1 台台达开关电源 V1（240W，DC24V）和 1 台明纬开关电源 V2（150W，DC24V），用于把交流 220V 电压转变为直流 24V 电压，其中电源 V1 给示教器及控制柜内控制器、IO 单元、继电器等元器件进行供电。电源 V2 给 6 个轴的电机抱闸线圈进行供电。电源 V1 由于内部存在负载消耗，外接最大负载功率不超过 72W（3A），若负载功率超过 72W(3A)，则需客户自行添加开关电源进行供电，且添加的开关电源需要与开关电源 V1 等电位。

The control cabinet of the robot adopts one Delta switching power supply V1 (240W, DC 24V) and one Meanwell switching power supply V2 (150W, DC 24V) to convert the 220V AC voltage to 24V DC voltage. V1 supplies power to the teaching device and the controller, IO unit, relay and other components inside the control cabinet. V2 supplies power to the motor lock coil of six joints. Due to the internal load consumption, the maximum external load power of V1 should not exceed 72W (3A). If the load power exceeds 72W (3A), the customer needs to add a switching power supply for power supply which shall have the same potential as V1.

注意：开关电源 V2 用于驱动器抱闸使用，严禁外接其他负载。

Notes: V2 is used for the driver lock coil and is prohibited from being connected to any external load.

图 2-14 开关电源

Diagram 2-14 Switching Power Supply

2.1.8 继电器

Relay

控制柜中共有 5 个中间继电器，自带续流二极管，其中每个继电器对应有发光二极管进行动作指示，方便检修时通过查看二极管是否点亮来排查故障，继电器外观如图 2-15 所示。

There are 5 auxiliary relays with built-in freewheel diodes in the control cabinet. The status of each relay is respectively indicated by a light-emitting diode, which allows troubleshooting by checking whether the diode is on or off. Diagram 2-15 shows the appearance of the relays.

图 2-15 继电器

Diagram 2-15 Relay

- 继电器 KA1：220V 线圈继电器控制开关电源 DC 24V 通断

  Relay KA1: a 220V coil relay used for on-off control of the switching power supply DC 24V

- 继电器 KA2：控制 J1 轴电机抱闸线圈

  Relay KA2: controls the motor lock coil of J1 shaft

- 继电器 KA3：控制 J2 轴电机抱闸线圈

  Relay KA3: controls the motor lock coil of J2 shaft

- 继电器 KA4：控制 J3 轴电机抱闸线圈

  Relay KA4: controls the motor lock coil of J3 shaft

- 继电器 KA5：预留用户使用或控制附加轴电机抱闸线圈

  Relay KA5: reserved for the user to use or controls the motor lock coil of additional shafts

- 继电器 KA6：预留用户使用或控制附加轴电机抱闸线圈

  Relay KA6: reserved for the user to use or controls the motor lock coil of additional shafts

2.2 示教器

Teaching Device

示教器是用于华数工业机器人的手持编程器，具有使用华数工业机器人所需的各种操作

和显示功能，使用手册详见《HSpad-03 使用说明书》或《HSpad-201 使用说明书》。借助 HSpad-03 示教器或 HSpad-201，用户可以实现工业机器人控制系统的主要控制功能：

The teaching device is a hand-held programmer used for Huashu industrial robots. It provides all kinds of operations and display functions needed to control Huashu industrial robots. For more information, please see *HSpad -03 Operation Manual* or *HSpad -201 Operation Manual.* By using HSpad-03 teaching device or HSpad-201, users can realize the following main control functions of the industrial robot control system:

- 手动控制机器人运动

  Control the motion of robot manually
- 机器人程序示教编程

  Teaching programming of robot program
- 机器人程序自动运行

  Automatic run of robot program
- 机器人程序外部运行

  External run of robot program
- 机器人运行状态监视

  Monitoring of robot operation state
- 机器人控制参数查看

  Checking robot controlling parameters

HSpad-201 或 HSpad-03 示教器采用高性能触摸屏（8"彩色 LCD 触摸屏）+周边按键的操作方式，具有多组按键，进行机器人的参数设置、运动控制及状态监视；示教器设有模式选择旋钮，可以实现 T1/T2 示教编程模式、自动运行模式和外部运行模式；设置有急停按钮和三段式安全开关，确保机器人操作的安全性；具有 USB 接口，可以进行示教程序的外部存储；示教器至控制柜的连接线缆标配长度为 8m，确保操作员处于机器人的安全范围。

HSpad-201 or HSpad-03 teaching device adopts high performance touch screen (8" color LCD touch screen)+peripheral buttons, with multiple sets of keys to set parameters, control motion and monitor status of the robot. The teaching device has mode selection knob, which can switch between T1/T2 Teaching Programming Mode, Automatic Run Mode and External Run Mode. It is equipped with emergency stop button and three-section safety switch to ensure the safety of the operation of the

robot; it has USB interface to externally store the teaching program; and the standard length of the connecting cable from the teaching device to the control cabinet is 8m to ensure that the operator is in the safe area.

示教器与控制柜采用接插件进行对应连接，便可快速完成两者的电气连接。通过将示教器对接插接头（公）与控制柜柜体对插接座（母）进行连接，便可实现示教器 DC24V 供电、示教器急停信号接入控制柜内伺服驱动器 IO 接口；以及实现示教器与控制器的以太网通讯。示教器的电气接线图如图 2-16 所示。

The teaching device and the control cabinet are connected by connectors, which can finish the electrical connection between them quickly. By connecting the docking plug (male connector) of the teaching device with the docking socket (female connector) in the control cabinet respectively, the power supply of the teaching device DC24V, and emergency stop signal connecting the servo drive IO interface of the teaching device can be realized, and the Ethernet communication between the teaching device and the controller can be realized. The electrical connection of the teaching device is shown in Diagram 2-16.

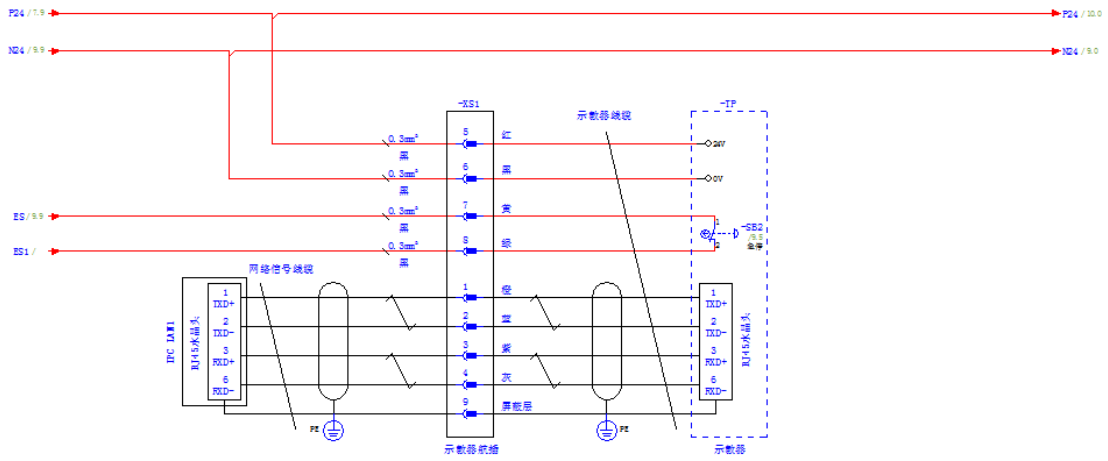

图 2-16 HSpad-201 及 HSpade-03 示教器电气接线图

Diagram 2-16 Electrical Connection of HSpad-201 and HSpade-03 Teaching Device

2.3 本体-控制柜连接线缆

Body- Control Cabinet Connecting Cable

本体—控制柜连接线缆是由两根动力/抱闸线缆和编码器线缆共同组成，线缆长度标配为

8 米，动力/抱闸线缆和编码器线缆重载引脚定义分别如图 2-17 和图 2-18 所示。

The body-control cabinet connecting cable is composed of one power/brake cable and one encoder cable. The standard length of the cable is 8 meters. The definition of heavy-duty pins for the power/brake cable and encoder cable are respectively shown in diagrams 2-17 and 2-18.

1-6 轴动力引脚

Power pins of axies 1-6

插芯 HK-006/36-MC/FC Inserted core HK-006/36-MC/FC											
序号 Item No.	线号 Wire No.	序号 Item No.	线号 Wire No.	序号 Item No.	线号 Wire No.	序号 Item No.	线号 Wire No.	序号 Item No.	线号 Wire No.	序号 Item No.	线号 Wire No.
01	U1	04	U2	11	U3	17	U4	35	U5	41	U6
02	VI	05	V2	12	V3	18	V4	36	V5	42	V6
03	W1	06	W2	13	W3	19	W4	37	W5	43	W6
26	PE1	32	PE2	14	PE3	20	PE4	38	PE5	44	PE6

1-6 轴抱闸引脚

Lock pins of axies 1-6

插芯 HK-006/36-MC/FC Inserted core HK-006/36-MC/FC											
序号 Item No.	线号 Wire No.	序号 Item No.	线号 Wire No.	序号 Item No.	线号 Wire No.	序号 Item No.	线号 Wire No.	序号 Item No.	线号 Wire No.	序号 Item No.	线号 Wire No.
27	BK1+	33	BK2+	15	BK3+	21	BK4+	39	BK5+	45	BK6+
28	BK1-	34	BK2-	16	BK3-	22	BK4-	40	BK5-	46	BK6-

图 2-17 动力/抱闸线缆重载引脚定义

Diagram 2-17 Definition of Power/Brake Cable Overload

插芯 HMD-012-MC/FC（上） Inserted core HMD-012-MC/FC (upper)				插芯 HMD-O12-MC/FC（中） Inserted core HMD-012-MC/FC (middle)				插芯 HMD-012-MC/FC（下） Inserted core HMD-012-MC/FC (lower)			
序号 Item No.	线号 Wire No.	序号 Item No.	线号 Wire No.	序号 Item No.	线号 Wire No.	序号 Item No.	线号 Wire No.	序号 Item No.	线号 Wire No.	序号 Item No.	线号 Wire No.
01	SD1+	07	SD2+	01	SD3+	07	SD4+	01	SD5+	07	SD6+
02	SD1-	08	SD2-	02	SD3-	08	SD4-	02	SD5-	08	SD6-
05	VCC1	11	VCC2	05	VCC3	11	VCC4	05	VCC5	11	VCC6
06	GND1	12	GND2	06	GND3	12	GND4	06	GND5	12	GND6

图 2-18 编码器线缆重载引脚定义

Diagram 2-18 Definition Encoder Cable Overload Pin

2.4 本体信号线

Body Signal Cable

机器人本体内置一根根 12×0.3mm^2 的信号电缆，线缆两端根据颜色对应接于本体转座安装板处和手臂处 16 芯航空插座（母头）相应引脚，航空插座配套公端插头附在随机打包附件中，本体上 2 只 16 芯航空插座（母头）安装位置如图 2-19 所示。

A 12x0.3mm^2 signal cable is built in the body. The two ends of the cable are connected to the pins in the 16-core aerial sockets (female) on the mounting plate of the rotating pedestal and on the arm according to color. The male plug is included in the attachments. Diagram 2-19 shows the installation positions of the two 16-core aerial sockets (female) on the body.

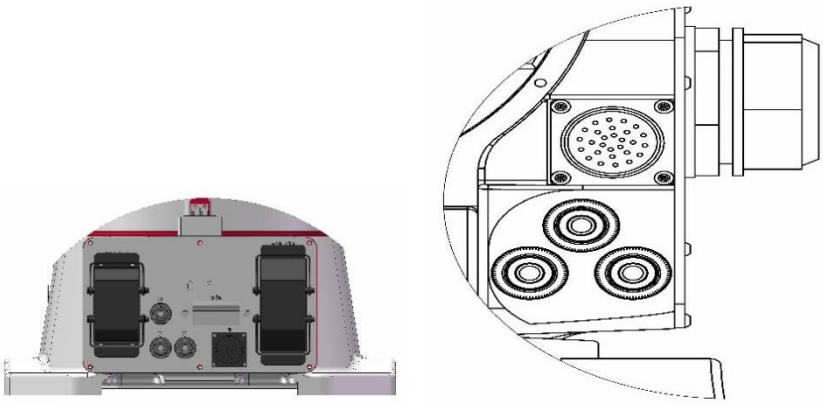

图 2-19 本体 16 芯航空插座（母头）安装位置

Diagram 2-19 Installation Positions of 16-core Aerial Sockets (female) on the Body

此信号线可以用于连接机器人末端法兰安装的夹具执行机构及传感器信号，用户可以根据具体情况进行选择使用；若有使用此信号线，并且需要在本体转座安装板16芯航空插座处增加延长线缆至机器人控制柜或外围设备，此延长线缆由用户自行配置。

This signal line can be used to connect the clamp actuator and sensor signals installed at the end of the robot with a flange. Users can choose to use the signal line as required. If this signal line is used, an extension cable should be added to the 16-core aerial socket on the installation plate of the rotational body pedestal to connect the robot control cabinet or peripheral equipment. The extension cable should be prepared by the user.

备注：此接头接线方式为焊接。

Remark: The connector is wired through welding.

3 快速操作入门
Operation Quick Start

本章节内容涉及示教器的最基本使用，进行机器人操作前，请务必对照查看《HSpad-03 使用说明书》或《HSpad-201 使用说明书》中相关内容的讲解，严格按本手册第 1.3 节安全操作规程所述内容执行；本章节简要介绍通过示教器手动运行机器人各轴，以使用户能够快速的熟悉 HSR-JR6150-C30 工业机器人的最基本操作，对示教器的使用及整个机器人系统建立一个直观的认识；再通过对示教器说明书的深入学习，达到深入使用 HSR-JR6150 工业机器人的目的，帮助客户尽量缩短现场应用调试时间。

This chapter covers the most basic use of the teaching device. Before operating the robot, be sure to check the instructions in *HSpad-03 Operation Manual* or *HSpad-201 Operation Manual* and strictly follow the instructions in Section 1.3 of this Manual. This chapter briefly introduces the manual operation of robot joints through the teaching device so that the user can rapidly get familiar with the most basic operation of HSR-JR6150-C30 industrial robot and intuitively understand the use of the teaching device and the whole robot system. Then through in-depth study of the instructions of the teaching device, the user can intensively use HSR-JR6150 industrial robot and shorten the field commissioning time as much as possible.

3.1 上电准备
Ready for Power

将配电柜 AC380V 电源（3P+N+PE）对应接入控制柜的 X1 端子排上，将示教器、本体与控制柜之间的连接线对应连接好。

Connect the AC380V power supply (3P + N + PE) of the distribution cabinet to the corresponding X1 terminal strip of the control cabinet, and connect the cables between the teaching device, the main body and the control cabinet.

3.2 系统上电

Energize the System

接通配电柜供电开关或断路器，确认 AC380V 和零线电压无误；旋转控制柜电源开关为 ON 状态，同时确保控制柜内断路器 QF1 置于 ON 状态，控制柜电源指示灯（白色）点亮，待示教器与控制器连接成功，示教器信息栏提示机器人初始化成功。

Connect the power supply switch or circuit breaker of the distribution cabinet to confirm the voltage is AC380V and the null line voltage is correct; rotate the power switch of the control cabinet to ON; and ensure the circuit breaker QF1 inside the control cabinet is also ON, and the power indicator (white) of the control cabinet is on. After the teaching device and the controller are successfully connected, the information bar on the teaching device indicates successful robot initialization.

3.3 手动模式选择

Select Manual Mode

转动示教器上的钥匙开关或模式选择开关，出现运行模式选择界面（图 3-1），选择手动 T1 运行模式，将钥匙开关再次转回初始位置，所选的运行模式会显示在示教器主界面的状态栏中。

Turn the key switch or mode select switch on the teaching device. The run mode selection interface (diagram 3-1) appears. Select the T1 manual run mode and turn the key switch back to the initial position again. The selected run mode will be displayed in the Status Bar of the main interface of the teaching device.

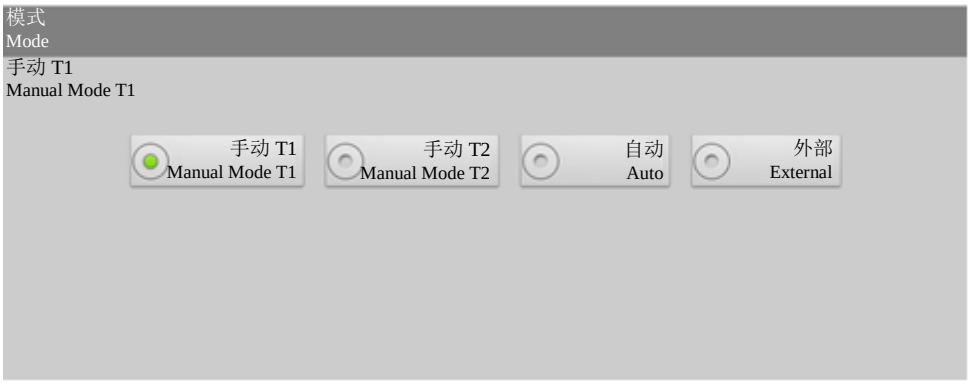

图 3-1 运行模式选择

Diagram 3-1 Select Run Mode

3.4 坐标系选择

Select Frame

在机器人控制系统中定义了下列坐标系：轴坐标系、世界坐标系、基坐标系和工具坐标系，此处选择轴坐标系。在示教器手动 T1 模式下，点击坐标系选择按键，选择坐标系统为轴坐标系，右侧【运行】键旁边会显示 A1~A6（图 3-2），同时显示轴坐标系图标。

In the robot control system, the following frames are defined: shaft frame, world frame, base frame and tool frame. Here shaft frame is selected. Under Manual Mode T1 of the teaching device, click the button to select shaft frame. Then A1~A6 (Diagram 3-2) will display beside [Operation] on the right and the shaft frame icon will also be displayed.

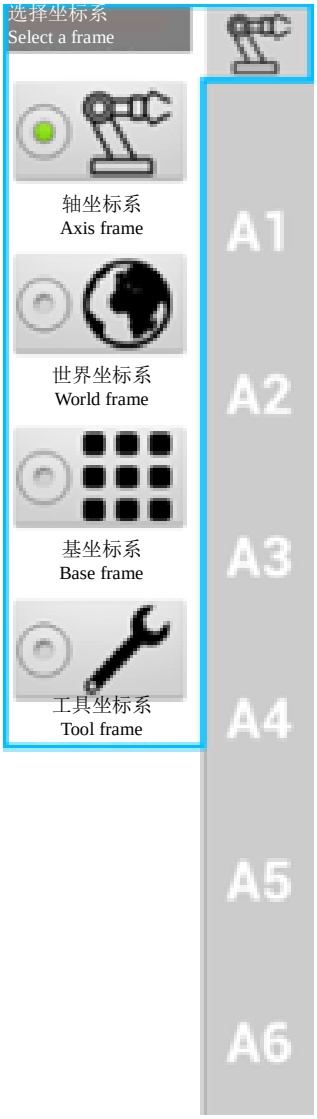

图 3-2 轴坐标系选择

Diagram 3-2 Select Shaft Frame

3.5 手动速度调整

Adjust Speed Manually

在示教器手动 T1 模式下，通过按右侧的手动倍率调节按键【+】键或【-】键，可以选择机器人的运动速度，通过状态区的速度显示来确认。

Under Manual Mode T1 of the teaching device, press manual ratio adjusting buttons [+]/[-] on the right to select motion speed of the robot. Confirm the final speed by checking the number displayed on the Status Bar.

按手动倍率调节按键【+】键，每按一次，手动速度按以下顺序变化：微动 1%→微动 3%→低 10%→中 30%→中 50%→高 75%→高 100%；按手动倍率调节按键【-】键，每按一次，手动速度按以下顺序变化：高 100%→高 75%→中 50%→中 30%→低 10%→微动 3%→微动 1%。

Press the manual ratio adjusting button [+], and every time you press it, the speed changes in the following order: fretting 1%, fretting 3%, low 10%, middle 30%, middle 50%, high 75%, high 100%. Press the rate adjusting button [-] and every time you press it, the manual speed changes in the following order: high 100%, high 75%, middle 50%, middle 30%, low 10%, micro, fretting 3%, fretting 1%.

3.6 手动使能

Manual Enabling

在示教器手动 T1 模式下，轻握示教器背面的【三段安全开关】，这时示教器上的【使能】指示灯亮起，表示伺服电源接通，同时可以听到机器人本体伺服电机抱闸打开的声音，并且控制柜内 KA2~KA4 继电器的 LED 指示灯点亮；若有某个继电器的 LED 指示灯不亮，说明此继电器对应控制的伺服电机抱闸有可能未打开，需进一步查明故障情况。

Under the Manual Mode T1 of the teaching device, lightly hold the [three-section safety switch] on the back of the teaching device. Then the [enable] indicator on the teaching device turns on,

indicating that the servo power is switched on. At the same time, the sound indicating opening of the servo motor lock on the robot body can be heard. If the LED of a relay does not turn on, the servo motor of the relay is not unlocked and further inspection should be carried out to identify the fault.

释放或用力握紧示教器背面的【三段安全开关】，这时示教器上的【使能】指示灯熄灭，表示伺服电源切断，同时可以听到机器人本体伺服电机抱闸闭合的声音，并且控制柜内 KA2~KA4 继电器的 LED 指示灯应熄灭。

Release or grip the [three-section safety switch] on the back of the teaching device. Then the [enable] indicator on the teaching device turns off, indicating that the servo power supply is cut off. At the same time, the sound indicating closing of the servo motor lock on the robot body can be heard and the LED indicator of relays KA2~KA4 in the control cabinet should turn off.

特别注意：按下控制柜或示教器上的任意急停按钮，伺服使能信号便无法激活，轻握示教器背面的【三段安全开关】无效，无法进行机器人的运动操作。

Special attention: If you press any emergency stop button on the control cabinet or the teaching device, the servo enable signal cannot be activated. A light grasp of the [three-section safety switch] on the back of the teaching device is useless, and the robot cannot be operated.

3.7 轴操作

Shaft Operation

在示教器手动 T1 模式下，选择系统坐标系为轴坐标系，按下手动倍率调节按键【+】键或【-】键调节至适当速度，轻握示教器背面的【三段安全开关】，待示教器上的【使能】指示灯亮起，按动右侧各轴操作键【+】键或【-】键，使机器人的每个轴产生所需的动作；各轴只在按住轴操作键时运动，按下【+】或【-】运行键，以使机器人轴朝正或反方向运动，机器人各轴的旋转方向如图 3-3 所示。

In the Manual Mode T1 of the teaching device, select the frame as shaft frame, press the manual ratio adjustment button [+] or [-] to adjust to the appropriate speed, and hold the [three-section safety switch] on the back of teaching device lightly. When the [enable] indicator on the teaching device is on, press the right shaft operation key [+] or [-], so that each shaft of the robot produces the required action; each shaft only moves when the key is pressed; press [+] or [-] keys to make the robot shaft

move in the positive or negative direction. The rotation direction of each shaft of the robot is shown in Diagram 3-3.

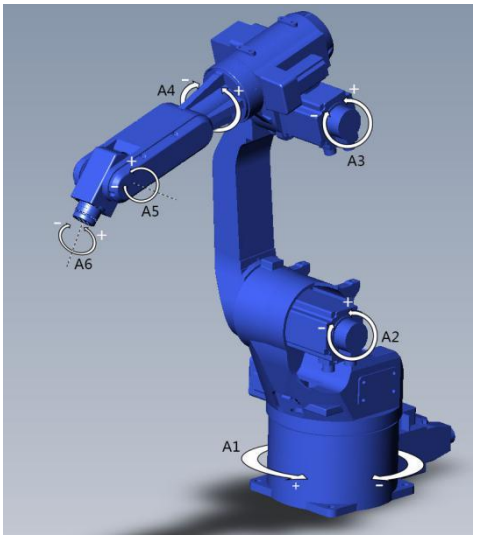

图 3-3 轴旋转方向

Diagram 3-3 Shaft Rotation Direction

3.8 系统下电

Power-off the System

机器人操作完毕，按下控制柜或示教器上的任意急停按钮，将示教器挂在控制柜的示教器固定架上；旋转控制柜电源开关为 OFF 状态，同时确保控制柜内断路器 QF1 置于 OFF 状态，控制柜电源指示灯（白色）熄灭，断开配电柜供电开关或断路器。

After the robot finishing the operation, press any emergency stop button on the control cabinet or the teaching device, and hang the teaching device on the fixed shelf on the control cabinet. Rotate the power switch of the control cabinet to OFF, while ensuring that the circuit breaker QF1 in the control cabinet is in OFF state, the power indicator (white) of the control cabinet is off, and the power supply switch or circuit breaker of the distribution cabinet is disconnected.

4 检修及维护
Overhaul and Maintenance

为确保安全生产，维持产品性能，以防患于未然，必须实施必要的日常维护及定期检修作业。

In order to ensure safety in production, maintain product performance and prevent accidents in the future, necessary daily maintenance and regular overhaul operations must be carried out.

4.1 检修注意事项
Overhaul Precautions

检修或更换零件时，应遵守以下注意事项，进行安全作业。

When overhauling or replacing parts, the following items should be observed for safe operation.

1）检修作业必须由接受过本公司机器人维修保养培训的人员进行；

1) Overhaul must be conducted by staff trained in robot repairing and maintenance by our company;

2）进行检修作业之前，请对作业所需的零件、工具和图纸进行确认；

2) Before overhaul, please check the parts, tools and drawings required for the operation;

3）更换零件时，请先切断一次电源，5 分钟后再进行作业；更换零件请使用本公司指定的零件，更换时切勿损坏连接线缆；

3) When replacing parts, please cut off the power supply once and operate in 5 minutes. Please use the parts designated by our company, and do not damage the connecting cable;

4）进行机器人本体的检修时，请务必先切断电源再进行作业；

4) When overhauling the robot body, power supply must be cut off in advance;

5）打开控制装置的门时，请务必先切断一次电源，并充分注意不要让周围的灰尘入内；

5) When opening the door of the controlling device, power supply must be cut off, and ensure no dust can enter inside it;

6）手触摸控制装置内的零件时，须将油污等擦干净后再进行。尤其是要触摸印刷基板和连接器等部位时，应充分注意避免静电放电等损坏 IC 零件；

6) When touching the parts of the controlling device by hand, the hand must be cleaned and free of greasy dirt. Especially when touching parts such as print baseplate and connector, full attention should be paid to avoid damage to IC parts such as electrostatic discharge;

7）一边操作机器人本体一边进行检修时，禁止进入动作范围之内；

7) When the robot body is operated and overhauled at the same time, it is forbidden to enter its motion range;

8）电压测量应在指定部位进行，并充分注意防止触电和接线短路；

8) Voltage measurement should be carried out at specified locations, and full attention should be paid to prevent electric shock and short circuit;

9）禁止同时进行机器人本体和控制装置的检修；

9) Overhauling of the robot body and controlling device at the same time is forbidden;

10）检修后，必须充分确认机器人动作后，再进入正常运转。

10) After overhaul, it is necessary to fully confirm the action of the robot before it enters into normal operation.

4.2 检修项目

Overhaul Items

为了使机器人能够长期保持较高的性能，必须进行维修检查。检修分为日常检修和定期检修，其基本周期及检修项目请参阅表 4-1，检修人员必须编制检修计划并切实进行检修。

In order to maintain the effective performance of the robot in the long term, maintenance and overhaul must be carried out. Overhaul includes daily overhaul and regular overhaul. The frequency and items are shown in Diagram 4-1. The overhaul staff should make overhaul plans and execute.

表 4-1 检修项目表

Diagram 4-1 Overhaul Items

序号 Item No.	检修周期 Overhaul Cycle				检修项目 Overhaul Items	检修内容 Overhaul Content	检修方法 Overhaul Method
	日常 Daily	3 个月 3 months	6 个月 6 months	1 年 1 year			
1	●	●	●	●	柜门 Cabinet door	前后柜门是否关好，门锁是否锁紧到位 Whether the front and rear cabinet doors are closed and whether the door locks are locked in place	目测 Visual inspection
						柜内密封构件部分有无缝隙和损坏 Whether there are any cracks and damages in the sealing components of cabinet	
2	●	●	●	●	示教器 Teaching Device	示教器外观是否污损 Whether the appearance of it is stained or damaged	目测、操作 Visual inspection, operation
						操作是否灵活、准确 Whether it runs flexibly and precisely	
						显示是否清晰、完整 Whether its displaying is clear and complete	
3		●	●	●	缆线组 Cable group	连接线外观是否破损、断裂 Whether the appearance of cable is damaged or broken	目测 Visual inspection
						器件端子连接处是否松动 Whether the connection of terminals is loose	
4	●	●	●	●	柜体操作指示面板	电源开关操作灵活、无卡顿现象 Whether the operation of power switch is	目测、操作 Visual

					Operation indicator panel on the cabinet	flexible and of no lag 电源指示灯、故障指示灯显示正常 Power supply indicator and failure indicator function well	inspection, operation
5	●	●	●	●	急停 Emergency stop	控制柜和示教器急停按钮操作灵活、无卡顿现象，急停动作准确、可靠 The emergency stop buttons on control cabinet and teaching device are flexible and smooth. The emergency stop action is accurate and reliable	操作 Operation
6	●	●	●	●	柜内器件 Equipment inside the cabinet	各器件相应指示灯显示是否正常 Whether the corresponding indicator lights of each device is normal or not 各器件是否有较多灰尘覆盖 Whether devices are covered by too much dust or not 是否有发热、声音异常、异味或电弧烧黑现象 Whether there are abnormal heating, sound, odor or arc blackness	综合观察 Comprehensive observation
7		●	●	●	散热风扇 Cooling fan	风扇转动是否异常，有无异响 Whether the fan runs normally and without abnormal sound 防尘网罩及防尘棉是否堵塞 Whether the dust-proof net cover and dust-proof cotton is blocked	感受排风口的出风量，倾听运转声音 Feel the air volume of the exhaust outlet and listen to

							the running sound
8		●	●	●	百叶窗 Jalousie	百叶窗外是否留有足够的通风空间 Whether there is enough space for ventilation outside the jalousie 百叶窗内的防尘棉是否堵塞 Whether the dust-proof cotton inside the jalousie is blocked	目测、清理 Visual inspection, cleaning
9		●	●	●	本体电池 Battery of body	电池电压是否为 DC3.0V 以上 Whether the voltage of battery is above DC3.0V	测电压 Measure the voltage
10		●	●	●	电压等级 Voltage class	柜内 AC380V、AC220V、DC24V 等级电压是否正常 Whether AC 380V, AC 220V, DC 24V class voltages are normal in cabinet	测电压 Measure the voltage

用户在进行检修作业时，如有对上表中检修项目存在检修内容和方法不明时，请联系本公司售后服务部门，以便进行正确的检修作业。

If the contents and methods of overhaul are unknown, please contact our after-sales service department for correct overhaul.

4.3 更换电池

Replace the battery

本机器人在电控系统断电时，采用 DC3.6V 锂电池作为本体伺服电机绝对编码器数据备份用电池，编码器电池存放于机器人本体底座后端重载安装板电池盒内。当电池电压下降超过一定限度，则无法正常保存编码器数据，需更换编码器电池。

DC3.6V lithium batteries are used as backup batteries for absolute encoder data of main body servo motor when the electronic control system is powered off. The encoder batteries are stored in the battery box of heavy-duty mounting plate at the back end of the main body pedestal. When the battery voltage drops beyond a certain limit, the encoder data cannot be saved normally, and the encoder battery needs to be replaced.

若示教器持续出现“编码器电池欠电压告警”警告：本体编码器电池电压低于 3.15V，则需要尽快更换本体编码器电池，否则可能会使机器人零点丢失；若示教器出现“编码器电池欠电压故障”报警：表示驱动器检测到编码器电池电压过低，同时检测电池电压若低于 3V，则需更换电池，然后重启驱动器。如果在驱动器通电时更换电池，可以保留位置信息。

If the teaching device continuously displays "Encoder battery undervoltage alarm": the battery voltage of robot encoder is under 3.15V, and the battery needs to be replaced as soon as possible, or the robot may lose zero; if the teaching device displays "Encoder battery undervoltage alarm": the drive detects that the encoder battery voltage is too low (under 3V), and the battery needs to be replaced, then restart the drive. The position information can be retained if the battery is replaced when the drive is on.

若需进行电池更换，只需拆开机器人本体底座后端重载安装板电池盒，拔掉需更换的旧电池，更换上本公司指定的新电池，将电池组捆扎好装回电池盒即可。

If battery replacement is needed, it is only necessary to dismantle the heavy-duty installation panel battery box at the back end of the robot body pedestal, unplug the old batteries to be replaced, replace the new batteries designated by our company, and bundle the battery pack into the battery box.

注意：电池每 2 年更换一次，旧电池应妥善处理，以免造成污染。更换电池时，请在电控系统通电状态下进行。电池更换后务必确认零点位置是否正确；若零点位置丢失需重新进行零点位置校准，方能正常运行机器人。

Attention: Batteries are replaced every 2 years. Old batteries should be properly disposed of to avoid pollution. When replacing batteries, please do it when the electronic control system is in energized state. After battery replacement, make sure that the zero position is correct. If the zero position is lost, the zero position should be calibrated again, so that the robot can run normally.

注意：若长时间断电停机，电池至多能持续供电 1 年。长时间断电不使用后，开机运行，需要检测编码器电池电压，若机器人出现报警“编码器电池电压过低”，请及时联系我司售后人员进行更换，以防丢失编码器数据。

Notes: If the robot is shut down for a long period, the battery will continuously supply power for up to 1 year. When the robot is switched on after prolonged shutdown, the encoder battery voltage needs to be inspected. If the "extremely low encoder battery voltage" alarm is shown, please timely contact our after-sales personnel for replacement to prevent loss of encoder data.

4. 4 零点位置校准

Zero Position Calibration

零点位置校准是将机器人位置与绝对编码器位置进行对照的操作。零点位置校准是在出厂前进行的，如果没有进行零点位置校准，将不能进行示教和再现操作。在下列情况下必须再次进行零点位置校准：

Zero position calibration is an operation that compares the position of the robot with that of the absolute encoder. Zero position calibration is carried out before leaving the factory. If zero position calibration is not carried out, teaching and reproduction operations cannot be carried out. Zero position calibration must be performed again in the following cases:

- 改变机器人与控制柜的组合时

  When group of robot and control cabinet is changed
- 更换电机、绝对编码器时

  When motor, absolute encoder are replaced
- 机器人碰撞工件，零点偏移时

  When robot hits workpiece, causing zero position to drift
- 更换电池操作不当致使编码器位置丢失时

When the battery replacement is done in a wrong way, causing loss of the position of encoder

校对零点前，需先将本体各轴的机械零标对齐。随着机器人的轴转动，两个零点标识牌长刻度线互相大概对正时，低速微调机器人转动角度，当两个零点标识牌长刻度线完全对正时，表示该位置即为机器人零点位置。各轴零标校对位置如图 4-1 所示。

Before correcting the zero point, the mechanical zero marks of the shafts of the body should be aligned. With the rotation of the robot's shaft, the two long scale lines of the zero sign plate are approximately in time with each other, and adjust the rotation angle of the robot in low-speed. When the two long scale lines of the zero sign plate are completely matching, the position is the zero position of the robot. The zero calibration position of each axis is shown in Diagram 4.1.

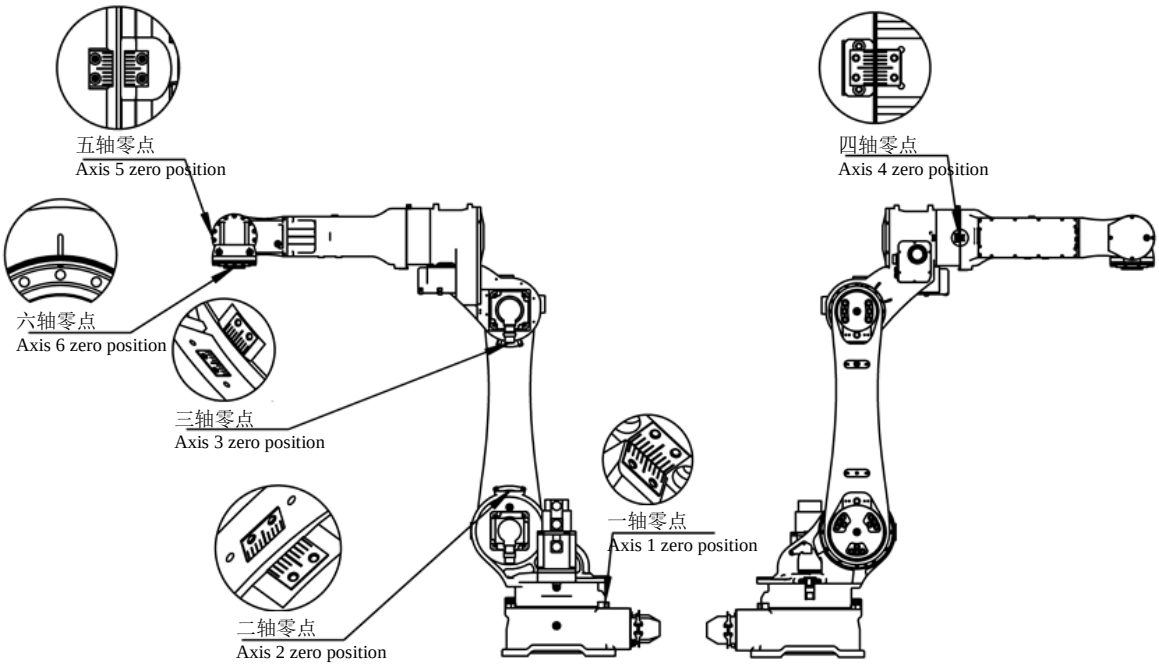

图 4-1 J1/J2/J3/J4/J5/J6 轴零点校对位置

Diagram 4-1 Zero Calibration Positions of J1/J2/J3/J4/J5/J6 Zero Calibration Position

零点位置校准步骤：

Zero position calibration steps:

1）示教器手动 T1/T2 模式下，运行机器人本体各轴机械零点对齐；

In the Manual T1/T2 Mode of the teaching device, the mechanical zeros of each shaft of the running robot body are aligned;

2）在示教器主菜单选择“配置->示教器配置->用户组”，登录为 Super 用户，登录用户登录界面如图 4-2 所示；

In the Main Menu of teaching device, select "Configuration->Teaching device configuration->User group", and log in as Super user. The user login interface is shown in Diagram 4-2;

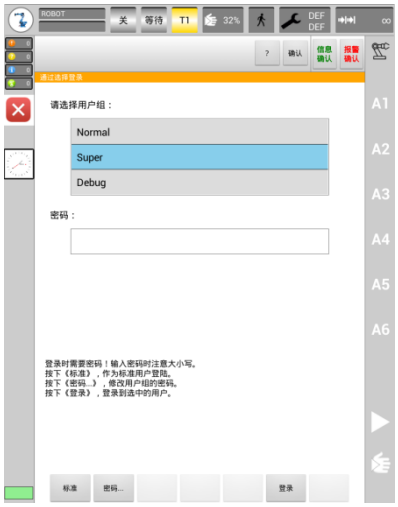

图 4-2 用户登录界面

Diagram 4-2 User Login Interface

3）在示教器主菜单选择“投入运行->调整->单轴校准或校准”，按图 4-3 所示点击输入各轴初始位置数据，点击“保存校准”按钮保存数据，保存成功后，单轴校准或轴校准生效；保存是否成功会在状态栏显示。

In the Main Menu of teaching device, select "Put in operation->Adjustment->Single axis calibration or calibration", and input initial position data according to Diagram 4-3. Click "Save calibration" to save the data. After the data are successfully saved, the single axis calibration or axes calibration takes effect; the status bar will display whether the data are successfully saved.

图 4-3 单轴/轴零点校准数据

Diagram 4-3 Zero Position Calibration Data of Individual Axis/Axes Zero Position Calibration Data

4）示教器手动 T1/T2 模式下，运行机器人本体各轴远离机械零点位置，在主菜单选择“显示->变量列表->JR 选项卡”，在图 4-4 所示的界面中选中 JR[1]变量，点击“修改”按钮，选中“关节”坐标,将轴 1~轴 6 的值分别更改为“0,-90,180,0,90,0”，点击“移动到点”按钮可使机器人本体各轴自动运行到零点位置，至此零点位置校准操作完成。

In the Manual Mode T1/T2 of the teaching device, operate the axes of the robot to a position far from the mechanical zero position. In the Main Menu, select the "Display->Variable List->JR tab". In the interface shown in Diagram 4-4, select the JR [1] variable, click the "Modify" button, select the "Joint" coordinates, and change the values of axes 1-6 to "0, -90, 180, 0, 90, 0 respectively. By clicking the "Move to Point" button, the joints of the robot body can automatically move the axes to the zero position, so that the zero position calibration is completed.

图 4-4 JR 关节位置寄存器变量表

Diagram 4-4 JR Joint Position Register Variables

5 IO 单元信号说明
IO Unit Signal Description

5.1 IO 信号配置
IO Signal Configuration

机器人出厂时，已在系统中对 IO 信号进行了相应配置，用户可根据实际需要接入或自定义使用，具体配置详见表 5.1。

When the robot leaves the factory, the IO signal has been configured in the system. Users can access or customize the IO signal according to their actual needs. Detailed configuration can be found in Figure 5.1.

X0.0～X0.8对应变量D_IN[0]～D_IN[7]——通用输入点位。

X0.0～X0.8 connect with variables D_IN[0]～D_IN[7]——general input points.

X1.0～X1.7对应变量D_IN[8]～D_IN[15]——通用输入点位。

X1.0～X1.7 connect with variables D_IN[8]～D_IN[15]——general input points.

X2.0～X2.7对应变量D_IN[16]～D_IN[23]——通用输入点位。

X2.0～X2.7 connect with variables D_IN[16]～D_IN[23]——general input points.

X3.0～X3.7对应变量D_IN[24]～D_IN[31]——通用输入点位。

X3.0～X3.7 connect with variables D_IN[24]～D_IN[31]——general input points.

表5.1 输出信号分配表（标准）

Figure 5.1 Output Signal Distribution (Standard)

输出点位	变量名	信号名称	功能	备注
Y0.0	D_OUT[1]	oSYS_ERR	系统错误 System error	固定系统功能输出，连接控制柜故障指示灯， Fixing system function output and connecting control cabinet failure

				indicator,
Y1.5	D_OUT[2]	oIS_RUNING	机器人运动中	系统占用
Y1.6	D_OUT[15]	/	控制继电器 KA1	预留用户使用，继电器
Y1.7	D_OUT[16]	/	控制继电器 KA2	预留用户使用，继电器

Y0.0～Y0.7对应变量D_OUT[0]～D_OUT[7]——通用输出点位，

Y0.0～Y0.7 connect with variables D_OUT[0]～D_OUT[7]—— general output points,

Y1.0～Y1.7对应变量D_OUT[8]～D_OUT[15]——通用输出点位，

Y1.0～Y1.7 connect with variables D_OUT[8]～D_OUT[15]—— general output points,

Y2.0～Y2.7对应变量D_OUT[16]～D_OUT[23]——通用输出点位，

Y2.0～Y2.7 connect with variables D_OUT[16]～D_OUT[23]—— general output points,

Y3.0～Y3.7对应变量D_OUT[24]～D_OUT[31]——通用输出点位。

Y3.0～Y3.7 connect with variables D_OUT[24]～D_OUT[31]—— general output points.

注：表5.1中所列配置了系统功能的IO点位（除固定系统功能外），用户可根据需求自行调整IO点位的系统功能配置，进行相应增加、减少或更改点位，特别是表5.1配置的系统功能输入必须是在示教器选择为外部模式下才有效，具体配置使用方法详见《Hpad-201使用说明书》中外部运行配置章节。

Notes: The system functions of the IO points listed in Figure 5.1 (except for fixed system functions) can be adjusted by users as required, and the IO points can be increased, reduced or changed accordingly. In particular, the system function inputs in Figure 5.1 is only valid when the teaching device is in the external mode. Detailed configuration methods can be found in the section of external operation and configuration in *Hpad-201 Operation Manual*.

5.2 IO 外部信号配置

IO External Signal Configuration

配置外部信号是将系统信号和 IO 输入输出索引建立映射关系的过程（即将功能与 IO 绑定），建立映射关系后，可通过 IO 信号执行程序运行，获取机器人状态等。所有的系统信号都必须经过配置后才能映射到对应的 IO 点位上。在一个未进行外部信号配置的系统中，默

认下系统信号和 IO 之前是没有映射连接关系的。

To configure external signals is to establish mapping between system signals and IO indexes (i.e., link functions to IO). After mapping is established, the IO signal executor can be run to obtain the robot status. All system signals must be configured to map to the corresponding IO point position. In a system without external signal configuration, there is no mapping relation between the system signal and IO by default.

机器人出厂时，只在系统中配置了报警信号输出 IO，若需要使用其它信号可以根据需求自由配置，具体配置使用方法详见《HSpad-03 使用说明书》或《Hpad-201 使用说明书》中 10.2 外部自动运行章节。

When the robot is delivered, there is only alarm signal output IO in the system. Other signals can be freely configured, when required. For detailed configuration method, refer to 10.2 Automatic External Operation in *Hspad-03 Operation Manual* or *Hpad-201 Operation Manual.*

注意：配置后的信号输入只在外部运行模式有效且该点 IO 不能作为它用，输出只要满足该信号条件无论什么模式都有输出但该点 IO 配置后也不能作为它用。

Notes: The signal input configuration will only be valid under external run mode and the IO cannot be used for other purposes. The output will exist under any mode if the signal conditions are satisfied and the IO configuration cannot be used for other purposes.

5.3 IO 电气连接

IO Electrical Connection

5.3.1 IO 型号配置

IO Model Configuration

华数适配雷赛出厂标准配置如表 5-1 所示：

Figure 5-1 shows the standard factory configurations of Leadshine compatible with Huashua robot:

雷赛 IO Leadshine IO	
型号 Model	说明 Note
EM64DX-E1	X1-X2 数字量输入 X1-X2 digital inputs
	X3 数字量输出 X3 digital output
	X4 数字量输入输出（可配置） X4 digital input and output (configurable)

表 5-1：雷赛系列 IO 出厂标准配置表

Figure 5-1: Standard Factory Configuration of Leadshine IO

5.3.2 雷赛系列配线

Leadshine IO Wiring

IO 单元中 EM64DX-E1 开关量输入低电有效（即 NPN 型），外部输入信号连接示例如图 5.1 所示。

The switch input of EM64DX-E1 (NPN type) in IO unit is active when the input level is low. An example of external input signal connection is shown in Diagram 5.1.

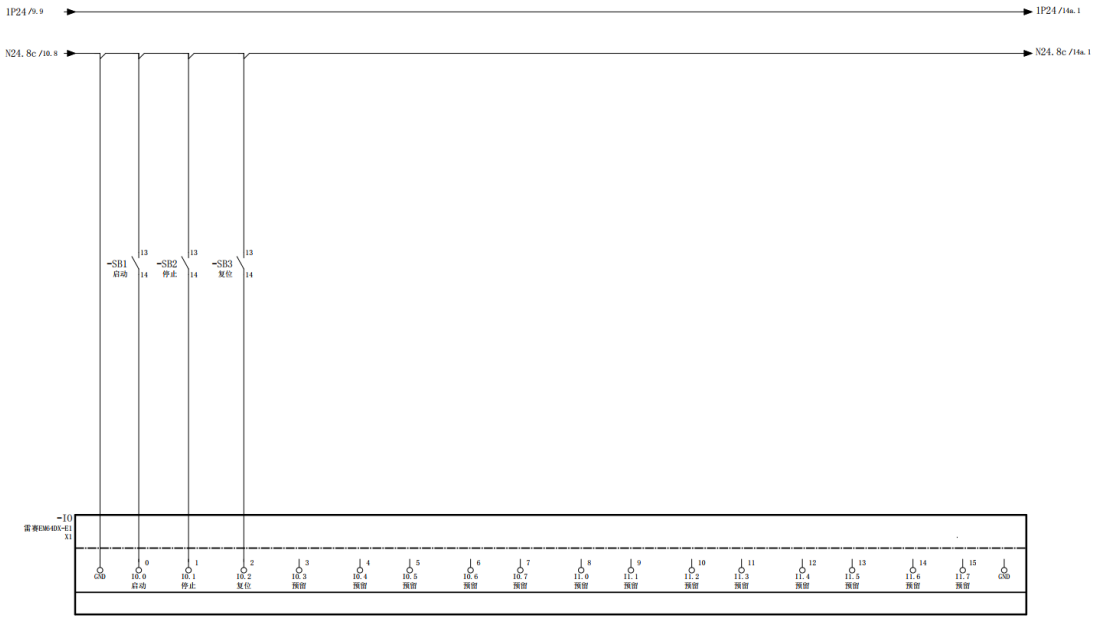

图 5-1 EM64DX-E1（NPN 型）输出信号连接电路图

Diagram 5-1 EM64DX-E1 (NPN type) Output Signal Connection

IO 单元中 EM64DX-E1 开关量输出（NPN 型）各输出点输出低电平（0V）有效，每个输出端口的最大通过电流为 **300mA 若输出端口连接继电器所选用的继电器要带有续流二极管**，连接外部执行器件的信号连接示例如图 5-2 所示。

The output points of EM64DX-E1 switch output sub-module (NPN type) in IO unit are active when the output level is low (0V). The maximum through current of each output port is **300mA. If an output port is to be connected to a relay, the relay shall be equipped with a freewheel diode**. An example of signal connection of external actuator is shown in Diagram 5-2.

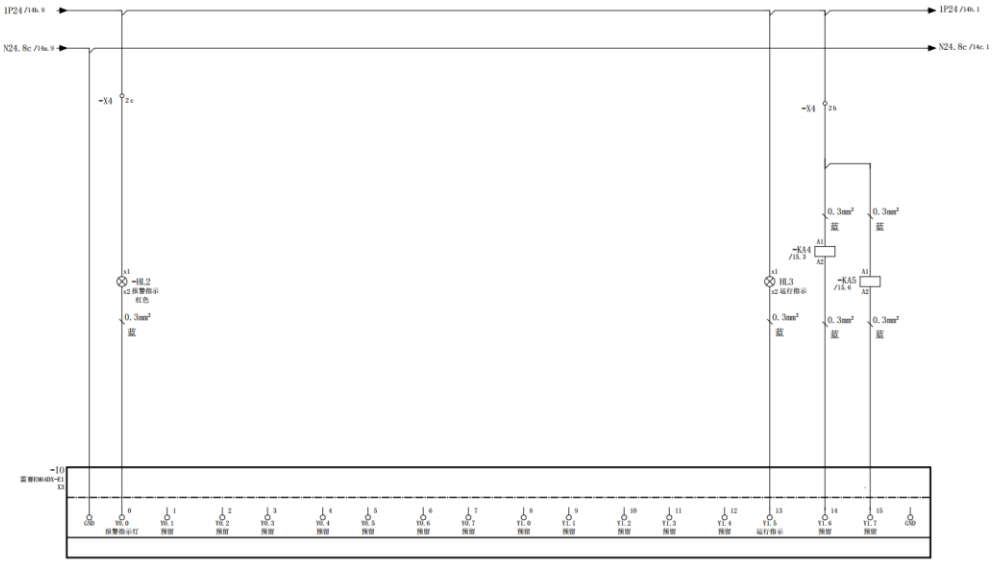

图 5-6 EM64DX-E1（NPN 型）输出信号连接电路图

Diagram 5-6 EM64DX-E1 (NPN type) Output Signal Connection

注意：在使用通用数字输出端口时，切勿把外部电源直接接至通用数字输出端口上，否则会造成 MOS 管损坏。

Notes: Do not connect the external power supply directly to a general digital output port. Otherwise, the MOS transistor will be damaged.

6 常见示教器报警处理

6. Handling of Common Teaching Device Alarms

报警代码 Alarm code	报警说明 Alarm explanation	原因分析 Reason analysis	处理对策 Treatment countermeasures
0xff8e8100: unknown module,unknown algorithm	急停 Emergency stop	示教器或电柜按下了急停开关 The emergency stop button on the teaching device or cabinet is pressed	松开急停按钮，清除报警 Release the emergency stop button and the alarm is lifted
0xc0060000:未能正常上下使能 0xc0060000: fail to normally enable and disable the robot	运动过程中未正常上下使能 Fail to normally enable and disable the robot during motion	①运动过程中（点动示教运动中、运动到点未结束运动），中途掉使能； ① The robot becomes disabled during motion (during jogging activated from the teaching device, before motion is ended after the robot moves to the designated point); ②运动到点未上使能 ② The robot fails to be enabled after moving to the designated point ③运行程序中，掉使能	①机器运动完成后，再掉使能 ① Disable the robot after it finishes the motion ②运动到点需先上使能再执行运动操作 ② Enable the robot before operation after the robot moves to the designated point ③先停止程序，再掉使能 ③ Disable the robot after the program is stopped

		③ The robot becomes disabled during operation	
0x80280000:自动运行未使能/ 0x80280000: automatic operation fails to be enabled/	运行程序未使能 the program fails to be enabled	加载运行程序，未打开使能 The robot is not enabled before the program is loaded	运行程序需先上使能，点击【报警确认】复位报警，上使能后，再运行程序 The robot needs to be enabled before running the program. Click [Alarm Ack] to reset alarm. Enable the robot before running the program
0x65030000：轴达到正限位 0x65030000: joint reaches the positive limit	机器人超软限位 The robot moves beyond the soft limit	机械臂当前已临近或超软限位 The manipulator arm is currently approaching or beyond the soft limit	打开示教器菜单栏“投入运行-软件限位开关”，查看实际位置，检查哪个轴超限位，点击【报警确认】复位报警后，往相反方向运动；（若不确定方向，可使用增量式模式，寸动的方式确定方向；若复位不了报警，可尝试断电重启后再复位） Open "Put in operation - Software limit switch" from the manu bar of the teaching device. View the actual position and identify the

			joint beyond the limit. Click [Alarm Ack] to reset alarm and then move the joint to the opposite direction (if the opposite direction cannot be identified, perform inching under incremental mode; if the alarm cannot be reset, try to reset after power off and restart)
0x40032002:运动分解错误，关节运动目标点不可达 0x40032002: motion decomposition is wrong and the joint motion target point is unreachable	机器人目标点不可抵达 The robot target point is unreachable	目标点位已超限位 The target point exceeds the limit	检查程序目标点位是否超限位 Check whether the programmed target point exceeds the limit
0x00060000:超区域限制（报错） 0x00060000: beyond	机器人目标点位超区域限位 The robot target point exceeds the area limit	机器人目标点位或当前处于干涉区域、共享区域内或安全区域外 The robot target point is or is currently in the interference area	区域配置界面检查是否设置了共享区、干涉区或安全区，调整区域大小或将影响的区域重置数据为 0 或设置为无效区

area limit (error)		or shared area or outside the safe area	Check on the area configuration interface whether shared area, interference area or safe area has been set. Adjust the area size or reset the affected area to 0 or set the affected area as invalid area
0x65060000：轴超加速 0x65060000: joint acceleration exceeds the limit	轴或轴组错误 Joint or joint group error	下发的位置超速度 The issued position is out of acceleration limit	①适度调整运动指令点位速度、加速比、减速比参数或降速,； ① Appropriately adjust the point speed, speed-up ratio, reduction ratio or speed reduction in the motion instruction; ②机器人当前处于奇异点位置，尝试添加过渡点或关节到点的方式避免此问题； ② The robot is currently at a singular point. Try to add a transition point or joint to the point to avoid this failure; ③目标点无法直线抵达，尝试添加过渡点或关节到点的方式避免此问题； ③ The target point cannot

			be reached along a straight line. Try to add a transition point or joint to the point to avoid this failure;
0xc0170000:运动到点空间转关节失败 0xc0170000: space fails to be converted to joint when the robot moves to the point	笛卡尔坐标关节到点转换失败 The Cartesian coordinates of joint fail to be converted to those of point	①形态位不正确 ① Pattern position is incorrect ②点位超限位，点位不可达 ② The point is beyond limit and unreachable	①手动运动到该位置，重新获取坐标，获取当前形态位，或该点笛卡尔坐标使用直线到点的位置抵达。 ① Manually move the robot to the position to acquire the coordinates again. Acquire the current pattern position, or reach the Cartesian coordinates of the point along a straight line. ②调整当前坐标 ② Adjust the current coordinates
0x00040004：前瞻超加速 0x00040004: prospective acceleration exceeds the limit	前瞻超速度 Prospective acceleration exceeds the limit	运动的轨迹接近奇异位置，会放大加速度，同时运动轨迹的给速度相关，会出现超加速的情况。 When the motion trail approaches the singular position, the acceleration will increase. When the motion trail is related to speed, the acceleration limit will be	解决这个问题可以从两个方面入手：（出现超加速的点位做以下一下处理） This failure can be handled from two aspects: (handle the point exceeding the acceleration limit as below) 1、将该运动直接改为关节运动，可以直接规避该问题；

		exceeded.	1. Changing the motion to joint motion can directly avoid the failure; 2、修改该段直线运动的速度和加速度，尽量调低，多次尝试调到最优的效果； 2. Lower the speed and acceleration of the linear motion as much as possible. Try several times to get the optimal result;
程序正在运行，不运行切换模式 Mode is not allowed to be switched when the program is running	程序运行状态下不允许模式切换 Mode is not allowed to be switched when the program is running	加载或运行状态下皆不运行切换模式 Mode is not allowed to be switched during loading or running	卸载程序后再切换模式 Switch mode after unloading the program

7 常见伺服驱动单元报警处理
Handling Common Alarms of Servo Driver

7.1 故障说明
Failure Explanation

伺服驱动单元的数码管根据显示的内容来表达驱动相关状态，比如系统状态、直流母线状态、网络状态及故障情况等，数码管状态定义具体如表 7-1 和 7-2 所示。

The digital tubes of the servo driver unit indicate the state of the driver (e.g. system state, DC bus state, network state, failure, etc.) according to the contents displayed. Figure 7-1 and Figure 7-2 show the definition of the states indicated by the digital tubes.

表 7-1 基本电源模块指示灯状态定义

Figure 7-1 State and Definition for Indicators of the Basic Power Supply Module

序号 Item No.	驱动器状态 Status of Drive	显示方式 Display Mode	显示内容 Display Contents	说明 Notes
1	初始化 Initialization	循环显亦 In cycle	**H-**[init step1, 4 位数字]-[init step2, 4 位数字]“**熄灭**” **H-**[init step1, 4-digit number]-[init step2, 4-digit number] "**off**"	初始化失败时，显示当前步骤，初始化步骤见初始化故障代码. The current step will be displayed when initialization fails. Refer to initialization failure code for initialization steps.
2	无故障运行 Operating without failure	常显 Consistently	［1 位数字］ [1-digit number]	显示字符为当前 402 状态值： The character displayed indicates the current 402 state value: 0- STATE_NOT_READY_TO_SWITCH_ON 1- STATE_SWITCH_ON_DISABLED 2- STATE_READY_TO_SWITCH_ON 3- STATE_SWITCHED_ON 4- STATE_OPERATION_ENABLED 5- STATE_QUICK_STOP_ACTIVE 6- STATE_SHUTDOWN_ACTIVE 7- STATE_DISABLE_OPERATION_ACTIVE 8- STATE_FAULT_REACTION_ACTIVE
3	告警 Alarm	循环显 In cycle	**A-**［告警代码，4 位字符］“**熄灭**” **A-**[alarm code, 4-digit character] "**off**"	

4	故障 Failure	循环显 In cycle	E-［故障代码，4 位字符］“熄灭” E-[alarm code, 4-digit character] "off"	
5	CPU 异常 CPU abnormality	常显 Consistently	4 4	此时驱动器发生栈空间溢出故障，无法正常运行。 Stack space spillover occurs in the drive, so the drive cannot operate normally.
6	虚拟模式 Virtual mode	常显 Consistently	.小数点 . decimal point	当驱动器工作在电机虚拟模式时，小数点常亮。 The decimal point will be always on when the drive operates while the motor is in virtual mode.

表 7-2 故障一览表：

Figure 7-2 List of Failures:

故障一览表】介绍了可检测的故障及其各项属性，其中：

The list of failures shows the detectable failures and their attributes in which:

- 【屏蔽属性】：用于标识该故障可否屏蔽，Y为可屏蔽，N为不可屏蔽。
- [Masking]: used to indicate whether a failure can be masked. Y indicates that a failure is maskable. N indicates that a failure is non-maskable.
- 【分配属性】：用于标识该故障的分组可否更改，Y为分组可更改，N为分组不可更改。
- [Distribution]: used to indicate whether the group into which a failure is classified can be changed. Y indicates that the group can be changed. N indicates that the group cannot be changed.
- 【复位属性】：当为Y时，故障可通过调试软件或上位机的复位命令进行清除，当为N时，需通过重启伺服驱动器或调试软件的软复位功能进行清除。
- [Reset]: Y indicates that a failure can be cleared via the reset command issued by the commissioning software or upper computer. N indicates that a failure has to be cleared by restarting the soft reset function of the servo driver or commissioning software.
- 【默认分组】：故障的默认分组状态，可用于配置故障优先级、停机方式等；
- [Default group]: means the default grouping status of a failure and can be used to configure failure priority, shutdown mode, etc.

序号 Item No.	故障名称 Description of Failure	故障代码 Failure Code	清除属性 Clearing	屏蔽属性 Masking	复位属性 Reset	默认分组 Default Grouping
1.	驱动器短路 Driver short circuit	0x2250	N	N	N	0

2.	U 相输出电流过大 Excessive output current of phase U	0x2310	Y	N	N	1
3.	V 相输出电流过大 Excessive output current of phase V	0x2311	Y	N	N	1
4.	W 相输出电流过大 Excessive output current of phase W	0x2312	Y	N	N	1
5.	驱动器硬件过流 Drive hardware overflowed	0x2320	Y	N	N	0
6.	驱动器输出对地短路 Drive output short circuit to ground	0x2330	N	Y	N	0
7.	主电源输入异常 Abnormal main power input	0x3130	Y	Y	Y	3
8.	直流母线过压 DC bus overvoltage	0x3210	Y	N	N	0
9.	直流母线欠压 DC bus under-voltage	0x3220	Y	N	Y	2
10.	功率模块过热 Power module overheating	0x4210	Y	N	Y	2
11.	CPU1 看门狗溢出 CPU1 watchdog overflow	0x6010	Y	N	N	0
12.	CPU2 看门狗溢出 CPU2 watchdog overflow	0x6011	Y	N	N	0
13.	能耗制动电阻过载 Dynamic braking resistor overload	0x7112	Y	N	Y	0
14.	电机持续过载 Motor continuously overloaded	0x8311	Y	N	Y	3
15.	位置跟随误差过大 Position following error is too large	0x8611	Y	Y	Y	4
16.	正向软限位 Positive soft limit	0x8612	Y	Y	Y	2
17.	负向软限位 Negative soft limit	0x8613	Y	Y	Y	2
18.	第一编码器数据溢出 Primary encoder data overflow	0x8800	N	N	N	0
19.	第二编码器数据溢出 Secondary encoder data overflow	0x8801	N	N	N	0
20.	CPU1 工作异常 Abnormal operation of CPU1	0xFF00	N	N	N	0
21.	CPU2 工作异常 Abnormal operation of CPU2	0xFF01	N	N	N	0
22.	CPU1 内存异常 Abnormal memory of CPU1	0xFF02	N	N	N	0
23.	CPU2 内存异常	0xFF03	N	N	N	0

	Abnormal memory of CPU2					
24.	CPU 内存冲突 CPU memory conflict	0xFF04	N	N	N	0
25.	转子定位错误 Rotor positioning error	0xFF05	Y	N	N	0
26.	第一编码器数据异常 Abnormal primary encoder data	0xFF06	Y	N	N	0
27.	第一编码器通信异常 Abnormal primary encoder communication	0xFF07	Y	N	N	0
28.	第一编码器通信超时 Primary encoder communication timeout	0xFF08	Y	N	N	0
29.	第一编码器内部异常 1 Inner abnormality 1 of primary encoder	0xFF09	N	N	N	0

表 7-2 故障一览表

Figure 7-2 List of Failures

7.2 故障及处理

Failure and Handling

7.2.1 故障原因及处理

Causes and Treatment of Failure

故障代码 Failure Code	名称 DESCRIPTION	可能原因 Possible Reasons
0x2250	驱动器短路 Driver short circuit	1.驱动器 UVW 输出线缆发生短路或对地短路 2.电机 UVW 发生短路或对地短路 3.驱动器内部发生短路或对地短路 4.驱动器受干扰导致误报此故障 1. The driver UVW output cable is short-circuited or short-circuited to the ground

		2. The motor UVW is short-circuited or short-circuited to the ground 3. The driver is internally short-circuited or short-circuited to the ground 4. The driver is disturbed, resulting in wrong alarm
0x2310	U 相输出电流过大 Excessive output current of phase U	1.电流环调节器参数设置不合理,导致电流控制振荡 2.电机参数设置错误 3.驱动器内部电流采样电路异常 1. Unreasonable setting of current loop regulator parameter leads to current control oscillation 2. Setting error of the motor parameter 3. Abnormal current sampling circuit in drive
0x2311	V 相输出电流过大 Excessive output current of phase V	1.电流环调节器参数设置不合理,导致电流控制振荡 2.电机参数设置错误 3.驱动器内部电流采样电路异常 1. Unreasonable setting of current loop regulator parameter leads to current control oscillation 2. Setting error of the motor parameter 3. Abnormal current sampling circuit in drive
0x2312	W 相输出电流过大 Excessive output current of phase W	1.电流环调节器参数设置不合理,导致电流控制振荡 2.电机参数设置错误 3.驱动器内部电流采样电路异常 1. Unreasonable setting of current loop regulator parameter leads to current control oscillation 2. Setting error of the motor parameter 3. Abnormal current sampling circuit in drive

0x2320	驱动器硬件过流 Drive hardware overflowed	1.电机负载过大或电机加速度、减速度设置过大,加减速时间设置过小 2.转子补偿角设置值有偏差，同时不满足转子定位错误检出条件 3.编码器反馈有异常跳变 4.电流环调节器参数设置不合理，导致电流控制振荡 5.电机参数设置错误(线电阻、线电感、反电动势和转子惯量等) 6.驱动器内部电流检测电路异常，或驱动器抱闸电路损坏,无 24V 输出 7.电机抱闸损坏 8.转矩偏移值或静态平衡补偿值设置不合理 1. The motor is overloaded or the setting value of motor acceleration or deceleration is too large, while the setting value of time for acceleration or deceleration is too small 2. The setting value of rotor compensation angle is incorrect, and the conditions for rotor positioning error detection are not satisfied 3. The encoder feedback changes abnormally 4. Unreasonable setting of current loop regulator parameter leads to current control oscillation 5. The motor parameters are set wrongly (line resistance, line inductance, back electromotive force, rotor inertia, etc.) 6. The internal current detection circuit of the driver is abnormal, or the driver lock circuit is damaged and there is no 24V output 7. The motor lock is damaged 8. The setting value of torque offset or static balance compensation is unreasonable

0x2330	驱动器输出对地短路 Drive output short circuit to ground	1.驱动器 UVW 输出线缆发生对地短路 2.电机 UVW 发生对地短路 3.驱动器内部发生短路或对地短路 1. The driver UVW output cable is short-circuited to the ground 2. The motor UVW is short-circuited to the ground 3. The driver is internally short-circuited or short-circuited to the ground
0x3130	主电源输入异常 Abnormal main power input	1.驱动器动力输入电源接线不良 2.驱动器功率回路设定选择为三相输入,但实际动力电源输入为单相 3.前端使用电子变压器,电子变压器谐波异常 1. Poor wiring of the drive power input power 2. The driver power circuit is set to provide three-phase input, but the actual power supply input is single-phase 3. The electronic transformer is used at the front end but the harmonic waves of the transformer are abnormal
0x3210	直流母线过压 DC bus overvoltage	1.驱动器动力输入电源电压过大 2.电机快速停止时的能耗制动能量过大 3.能耗制动电阻未接或接线错误 4.能耗制动电阻阻值过大 5.驱动器内部异常 1. Drive power input voltage is too high 2. The braking energy upon the quick stopping of motor is too much 3. The dynamic braking resistor is not connected or incorrectly wired 4. The resistance of the dynamic braking resistor is too high 5. The driver is internally abnormal

0x3220	直流母线欠压 DC bus under-voltage	1.驱动器动力输入电源电压过低 2.驱动器内部电压采样电路异常 3.驱动器功率回路设置错误,220V 供电设置为 380V 供电 4.驱动器动力输入电源线断开 1. Drive power input voltage is too low 2. Abnormal voltage sampling circuit in drive 3. The driver power circuit is set incorrectly. 380V power supply instead of 220V is set 4. Drive input power line is disconnected
0x4210	逆变模块过热 Inverter module overheating	1.电机负载过大 2.驱动器内部温度采样电路异常 3.驱动器运行环境温度超出了允许工作范围 1. The motor load is too large 2. Abnormal temperature sampling circuit in drive 3. Drive operating environment temperature is out of the allowable operating range
0x6010	CPU1 看门狗溢出 CPU1 watchdog overflow	驱动器内部异常 Internal abnormality of drive
0x6011	CPU2 看门狗溢出 CPU2 watchdog overflow	驱动器内部异常 Internal abnormality of drive
0x7112	能耗制动电阻过载 Dynamic braking resistor overload	1.电机频繁进行快速停止操作导致能耗制动能量过大 2.能耗制动电阻功率设置与实际电阻不一致 1. The frequent and rapid stops of the motor results in too much braking energy

		2. The setting value of the power of the dynamic braking resistor is inconsistent with the power of the actual resistor
0x8311	电机持续过载 Motor continuously overloaded	1.电机负载过大 2.电机加减速时间设置过小 3.电机参数设置错误 4.抱闸释放动作异常 5.电机选型错误,功率过小(比如大功率驱动器,带载小功率电机长时间满载高速运行) 6.驱动器内部电流采样电路异常 1. The motor load is too large 2. Motor acceleration and deceleration time is set too small 3. Setting error of the motor parameter 4. The lock is released abnormally 5. A wrong type of motor is selected of which the power is too low (e.g. a high-power driver drives a low-power motor to run at a high speed under full load for a long time) 6. The current sampling circuit inside the drive is abnormal
0x8611	位置跟随误差过大 Position following error is too large	1.电机负载过大 2.控制参数不合适 3.抱闸释放动作异常 4.位置跟随误差过大判定阈值或判定时间设施过小 1. The motor load is too large 2. The control parameters are improper 3. The lock is released abnormally 4. The position following error is too large, while the detection threshold or time is set too small

0x8612	正向软限位 Positive soft limit	位置反馈值超过（正向软限位值+定位完成阈值） The position feedback value is exceeded (positive soft limit + positioning completion threshold)
0x8613	负向软限位 Negative soft limit	位置反馈值超过（负向软限位值-定位完成阈值） The position feedback value is exceeded (negative soft limit + positioning completion threshold)
0x8800	编码器数据溢出 Encoder data overflow	位置模式下，未使能无限位置控制时，编码器多圈值超出了实际编码器的多圈位数。 In position mode, the infinite position control is not enabled, causing the multi-turn value of the encoder exceeds the actual value
0xFF00	CPU1 工作异常 Abnormal operation of CPU1	1.驱动器固件运行异常 2.驱动器内部异常 1. The driver firmware operates abnormally 2. The driver is internally abnormal
0xFF01	CPU2 工作异常 Abnormal operation of CPU2	1.驱动器固件运行异常 2.驱动器内部异常 1. The driver firmware operates abnormally 2. The driver is internally abnormal
0xFF02	CPU1 内存异常 Abnormal memory of CPU1	1.驱动器固件运行异常 2.驱动器内部异常 1. The driver firmware operates abnormally 2. The driver is internally abnormal
0xFF03	CPU2 内存异常 Abnormal memory of CPU2	1.驱动器固件运行异常 2.驱动器内部异常 1. The driver firmware operates abnormally 2. The driver is internally abnormal
0xFF04	CPU 内存冲突 CPU memory	1.驱动器固件运行异常 2.驱动器内部异常

	conflict	1. The driver firmware operates abnormally 2. The driver is internally abnormal
0xFF05	磁极定位错误 Pole positioning error	1.电机转子位置补偿角设定值与检测值不一致 2.转子定位故障检测灵敏度设置过小 3.静态平衡力矩补偿值设置与实际负载不一致。 4.电机接线错误导致转子相位角发生改变。 5.电机异常导致转子相位角发生改变。 6.重力负载导致伺服使能瞬间电机发生转动，速度超过转子定位故障检测灵敏度设置阈值 1. The setting value of motor rotor position compensation angle is inconsistent with the detection value 2. The setting value of rotor positioning failure detection sensitivity is too small 3. The setting value of static torque balance compensation is inconsistent with the actual load 4. The motor is incorrectly wired, resulting in change in the rotor phase angle 5. The motor is abnormal, resulting in change in the rotor phase angle 8. The gravity load causes the motor to run at the moment when the servo is enabled at a speed exceeding the rotor positioning failure detection sensitivity threshold
0xFF06	编码器数据异常 Abnormal encoder data	1.编码器本身数据发生异常 2.编码器线缆线序错误或接触不良 3.由于噪音干扰导致编码器数据异常 1. The encoder data are abnormal 2. The encoder cable is connected in the wrong sequence or in poor contact 3. Noise disturbance results in abnormal encoder data

0xFF07	编码器通信异常 Abnormal encoder communication	1.编码器本身发生异常 2.编码器线缆线序错误或接触不良 3.由于噪音干扰导致编码器数据异常 1. The encoder is abnormal 2. The encoder cable is connected in the wrong sequence or in poor contact 3. Noise disturbance results in abnormal encoder data
0xFF08	编码器通信超时 Encoder communication timeout	1.编码器本身发生异常 2.编码器线缆线序错误或接触不良 3.由于噪音干扰导致编码器数据异常 1. The encoder is abnormal 2. The encoder cable is connected in the wrong sequence or in poor contact 3. Noise disturbance results in abnormal encoder data
0xFF09	编码器内部异常 1 Inner abnormality 1 of encoder	编码器内部状态异常 The inner state of the encoder is abnormal
0xFF10	驱动器其它轴异常 Abnormality of other driver shafts	1.其它轴发生了故障 2.驱动器内部电路异常 1. Other joint has failure 2. Abnormal internal circuit of the drive
0xFF11	电机抱闸断线 Motor lock disconnected	1.电机抱闸未连接或接触不良 2.电机抱闸异常 3.驱动器内部异常 1. The motor lock is not connected or in poor contact 2. The motor lock is abnormal 3. The driver is internally abnormal

0xFF14	控制编码器超速 Controller encoder overspeed	1 编码器位置反馈值在一个位置采样周期内的变化量过大，超过电机最高转速的 1.3 倍。 2 编码器异常 3.由于噪音干扰导致编码器数据异常 1. The change in encoder position feedback value is too large in one position sampling cycle and is more than 1.3 times of the maximum RPM of the motor 2. The encoder is abnormal 3. Noise disturbance results in abnormal encoder data
0xFF15	驱动器持续过载 Drive continuously overloaded	1.电机负载过大或加减速时间设置过小 2.实际机械负载过大或存在卡死现象 3.电机抱闸未释放 4.电机或电机抱闸异常 5.驱动器内部异常 1. The motor load is too large or the setting values of acceleration and deceleration time are too small 2. The actual mechanical load is too large or jammed 3. The motor lock is not released 4. The motor or motor lock is abnormal 5. The driver is internally abnormal
0xFF16	驱动器瞬时过载 Drive instantaneously overloaded	1.电机瞬时负载过大 2.驱动器内部温度采样电路异常 3.驱动器运行环境温度超出了允许工作范围 4.由于噪音干扰导致功率模块温度采样异常 1. The instantaneous load of the motor is too large 2. Abnormal temperature sampling circuit in drive 3. Drive operating environment temperature is out of the allowable operating range 4. Noise disturbance results in abnormality in power

		module temperature sampling
0xFF17	驱动器输出缺相 Drive output missing phase	1.驱动器 U,V,W 输出存在断线或接线不良等现象 2.电机阻抗过大 3.驱动器内部电流采样电路异常 1. There's broken or poor wiring of drive U, V, W 2. Excessive motor impedance 3. Abnormal current sampling circuit in drive
0xFF18	电机失速 Motor stalling	1.驱动器调节器参数设置不合理导致速度跟踪超调过大 2.由于电磁噪音干扰导致编码器数据异常变化 3.由于编码器损坏导致编码器数据异常变化 4.驱动器内部电路异常 1. Improper setting of driver regulator parameters results in high speed tracking overshooting 3. Electromagnetic noise disturbance results in abnormal changes in encoder data 3. Damage of the encoder results in abnormal changes in encoder data 4. Abnormal internal circuit of drive
0xFF19	协处理器通讯异常 Co-processor communication abnormality	1.编码器线缆线序错误或接触不良 2.由于噪音干扰导致编码器数据异常 1. The encoder cable is connected in the wrong sequence or in poor contact 2. Noise disturbance results in abnormal encoder data

0xFF20	编码器 AB 信号变化异常 Abnormal change in encoder AB signal	1.编码器线缆线序错误或接触不良 2.由于噪音干扰导致编码器数据异常 1. The encoder cable is connected in the wrong sequence or in poor contact 2. Noise disturbance results in abnormal encoder data
0xFF21	电流跟随误差过大 Excessive current following error	1.驱动器调节器参数设置不合理导致速度跟踪超调过大 2.由于电磁噪音干扰导致编码器数据异常变化 3.由于电机损坏而导致电流反馈异常变化 4.驱动器内部电路异常 1. Improper setting of driver regulator parameters results in high speed tracking overshooting 3. Electromagnetic noise disturbance results in abnormal changes in encoder data 3. Damage of the motor results in abnormal changes in current feedback 4. Abnormal internal circuit of drive
0xFF22	位置目标值异常 Abnormal target position value	1.CSP 模式下，伺服使能瞬间，位置目标值和位置实际值之差超过位置跟随误差过大设定阈值 2.CSP 模式下，电机运行过程中，目标轨迹加速度超过参数 最大加速度设定阈值，且位置目标值和位置实际值之差超过位置跟随误差过大设定阈值 1. In CSP mode, the difference between the target position value and the actual position value exceeds the threshold of the maximum position following error at the moment when the servo is enabled 2. In CSP mode, the target trajectory acceleration exceeds the threshold of maximum acceleration when the motor is running and the difference between the target position value

		and the actual position value exceeds the threshold of the maximum position following error
0xFF23	编码器上电数据溢出 Encoder power-on data overflow	驱动器上电时反馈位置值超出了编码器允许的最大范围 The position feedback value exceeds the maximum permissble range of the encoder when the driver is powered on
0xFF24	位置目标值溢出 Target position value overflow	位置模式下，当禁止无限位置控制时，位置目标值超出了允许的最大范围 In position mode, the target position value exceeds the maximum permissible range when infinite position control is disabled
0xFF25	电机抱闸异常 Motor lock abnormality	1.电机抱闸本身发生异常，不能正常制动。 2.电机在高速运行时突然伺服 OFF，制动时间过长。 3.电机抱闸制动时间设置值小于抱闸实际制动动作时间。 4.转子定位故障检测灵敏度设置过小 1. The motor lock itself is abnormal and cannot be normally braked 2. The servo becomes suddenly off when the motor is running at a high speed and the braking time is too long 3. The setting value of motor lock braking time is shorter than the actual braking time 4. The setting value of rotor positioning failure detection sensitivity is too small

0xFF26	控制电源欠压 Control power supply undervoltage	1.24V 控制电源异常 2.24V 控制电源接线错误,或接触不良 3.24V 控制电源负载过大 4.驱动器内部电路异常 1. 24V control power anomaly 2. The 24V control power supply cable is incorrectly connected or in poor contact 3. Excessive load of 24V control power supply 4. Abnormal internal circuit of drive
0xFF27	STO1 触发 STO1 triggered	STO1 触发或接线不良 STO1 trigger or poor wiring
0xFF28	STO2 触发 STO2 triggered	STO2 触发或接线不良 STO2 trigger or poor wiring
0xFF29	正向硬限位开关触发 Positive hard limit switch triggered	单方向运行至机械限位，导致硬件限位触发 The mechanical limit is reached in one-way running, causing the hard limit to be triggered
0xFF30	负向硬限位开关触发 Negative hard limit switch triggered	单方向运行至机械限位，导致硬件限位触发 The mechanical limit is reached in one-way running, causing the hard limit to be triggered
0xFF31	电机超速 Motor overspeed	1 电机实际速度反馈值超出电机最高转速的 1.1 倍。 2 编码器异常 1. The feedback value of the actual motor RPM is more than 1.1 times of the maximum motor RPM 2. The encoder is abnormal
0xFF32	急停输入开关触发	急停输入开关触发或接线不良 The emergency stop switch is triggered or in poorly

	Emergency stop switch triggered	connected
0xFF33	转矩监测饱和故障 Torque monitoring saturated	1.电机负载过大，超过了转矩监测告警阈值 2.转矩饱和监测阈值设置过小 1. The motor load is too high and exceeds the alarm threshold set for torque monitoring 2. The setting value of the threshold of torque saturation is too small
0xFF34	速度跟随误差过大 Speed following error is too large	1.电机负载过大 2.控制参数不合适 3.抱闸释放动作异常 4.速度跟随误差过大判定阈值或判定时间设置过小 1. The motor load is too large 2. The control parameters are improper 3. The lock is released abnormally 4. The speed following error is too large, while the detection threshold or time is set too small
0xFF35	驱动器过流 2 Drive overcurrent 2	1.驱动器 UVW 输出线缆发生短路或对地短路 2.电机 UVW 发生短路或对地短路 3.驱动器内部发生短路或对地短路 4.驱动器受干扰导致误报此故障 1. The driver UVW output cable is short-circuited or short-circuited to the ground 2. The motor UVW is short-circuited or short-circuited to the ground 3. The driver is internally short-circuited or short-circuited to the ground 4. The driver is disturbed, resulting in wrong alarm

0xFF36	寻原点失败 Origin seeking failure	1.寻原点参数设置不合理 2.寻原点启动时,电机已处于限位开关触发状态 3.寻原点过程中切换至非 HM 模式 1. Unreasonable setting value of origin seeking parameter 2. The motor is already in the state of limit switch trigger when starting to seek the origin 2. The non-HM mode is activated during origin seeking
0xFF37	EtherCAT 过程数据错误 EtherCAT procedure data error	PDO 设定值超出了对象允许范围 The setting value of PDO exceeds the permissible range
0xFF38	EtherCAT 总线指令非法 EtherCAT bus command is invalid	EtherCAT 通讯状态机与控制字时序配合错误 EtherCAT communication state machine is not coordinated with control word timing
0xFF39	EtherCAT 通讯周期错误 EtherCAT communicatin cycle error	1.EtherCAT 通讯周期小于伺服控制周期 2.EtherCAT 通讯周期设置不是 250us 的 2 的整数次幂 1. EtherCAT communication cycle is shorter than the servo control cycle 2. The setting value of EtherCAT communication cycle is not a power of 250us which power should be an integral multiple of 2
0xFF40	位置规划运行错误 Location planning running error	1.EtherCAT 控制权下，运行 PP 模式时，位置目标值缓存超限 2.驱动器内部异常 1. The target position value cache is out of limit when in PP mode under EtherCAT control

		2. The driver is internally abnormal
0xFF41	EtherCAT 非法同步模式 Illegal EtherCAT synchronization mode	1.EtherCAT 通信 DC 模式配置错误 2.EtherCAT 通信未激活 DC 模式 1. The EtherCAT communication DC mode is incorrectly configured 2. The EtherCAT communication DC mode is not activated
0xFF42	位置目标值超出设定范围 Target position value out of range	模数无限位置控制模式或者禁止无限位置控制模式时，位置目标值超出了允许设定范围 In module infinite position control mode or when infinite position control mode is disabled, the target position value exceeds the permissible range
0xFF43	整流模块过热 Rectifier module overheating	1.驱动器内部温度采样电路异常 2.驱动器运行环境温度超出了允许工作范围 1. The temperature sampling circuit inside the driver is abnormal 2. The driver operates in a temperature out of the allowable range
0xFF44	散热器过热 Radiator overheating	1.驱动器内部温度采样电路异常 2.驱动器运行环境温度超出了允许工作范围 1. The temperature sampling circuit inside the driver is abnormal 2. The driver operates in a temperature out of the allowable range

0xFF45	电机 U 相瞬时过载 Instantaneous overload of motor U phase	1.电机负载过大 2.电机加减速时间设置过小 3.电机参数设置错误 4.抱闸释放动作异常 5.电机选型错误,功率过小(比如大功率驱动器,带载小功率电机长时间满载高速运行) 6.驱动器内部电流采样电路异常 7.电机快速过载保护阈值和保护时间设置偏小 1. The motor load is too large 2. Motor acceleration and deceleration time is set too small 3. Setting error of the motor parameter 4. The lock is released abnormally 5. A wrong type of motor is selected of which the power is too low (e.g. a high-power driver drives a low-power motor to run at a high speed under full load for a long time) 6. The current sampling circuit inside the drive is abnormal 7. The setting values of the treshold and time for rapid motor overload protection are small
0xFF46	电机 V 相瞬时过载 Instantaneous overload of motor V phase	1.电机负载过大 2.电机加减速时间设置过小 3.电机参数设置错误 4.抱闸释放动作异常 5.电机选型错误,功率过小(比如大功率驱动器,带载小功率电机长时间满载高速运行) 6.驱动器内部电流采样电路异常 7.电机快速过载保护阈值和保护时间设置偏小 1. The motor load is too large 2. Motor acceleration and deceleration time is set too small 3. Setting error of the motor parameter

		4. The lock is released abnormally 5. A wrong type of motor is selected of which the power is too low (e.g. a high-power driver drives a low-power motor to run at a high speed under full load for a long time) 6. The current sampling circuit inside the drive is abnormal 7. The setting values of the treshold and time for rapid motor overload protection are small
0xFF47	电机 W 相瞬时过载 Instantaneous overload of motor W phase	1.电机负载过大 2.电机加减速时间设置过小 3.电机参数设置错误 4.抱闸释放动作异常 5.电机选型错误,功率过小(比如大功率驱动器,带载小功率电机长时间满载高速运行) 6.驱动器内部电流采样电路异常 7.电机快速过载保护阈值和保护时间设置偏小 1. The motor load is too large 2. Motor acceleration and deceleration time is set too small 3. Setting error of the motor parameter 4. The lock is released abnormally 5. A wrong type of motor is selected of which the power is too low (e.g. a high-power driver drives a low-power motor to run at a high speed under full load for a long time) 6. The current sampling circuit inside the drive is abnormal 7. The setting values of the treshold and time for rapid motor overload protection are small
0xFF49	驱动器内部异常 1 Inner abnormality	驱动器内部异常 Internal abnormality of drive

	1 of driver	
0xFF50	限位开关异常 Limit switch abnormality	限位开关触发或接线不良 The limit switch is triggered or poorly connected
0xFF51	EtherCAT 总线通讯异常 Abnormal EtherCAT bus communication	1.EtherCAT 通讯受到干扰 2.EtherCAT 网线断开或接触不良 3.上位机实时性不够 4.上位机 EtherCAT 主站底层 DC 同步机制与驱动器需求不匹配 5.驱动器内部异常 1. EtherCAT communicatin is disturbed 2. EtherCAT cable is broken or in bad contact 3. The upper computer is not real-time enough 4. The underlying DC synchronization mechanism of upper controller EtherCAT master station does not meet the requirements of the driver 5. The driver is internally abnormal
0xFF52	接口编码器分辨率变更 Interface encoder resolution changing	更改了接口编码器分辨率 The interface encoder resolution is changed
0xFF53	编码器过热 Encoder overheating	1.编码器实际温度过高 2.编码器异常 1. The actual encoder temperature is too high 2. The encoder is abnormal
0xFF54	编码器电池欠电压故障 Encoder battery	1.编码器电池电压过低 2.编码器电池接线接触不良 1. The encoder battery voltage is too low

	undervoltage failure	2. The encoder battery wire is in poor contact
0xFF57	控制模式设定错误 Control mode setting error	伺服 ON 时，控制模式设定为驱动器不支持的模式，如 NM、VL 或 IP，或者 EtherCAT 控制权时控制模式设置为 PV 或 PT When the servo is on, the control mode is set as a mode that is not supported by the driver, e.g. NM, VL or IP, or the control mode is set as PV or PT under EtherCAT control
0xFF58	上电位置偏差过大 The power on positional deviation is too large	驱动器上电时，与上一次掉电保存位置不一致，超过设定阈值 The position of the driver when it is powered on is inconsistent with the position last saved upon power-off and exceeds the threshold
0xFF59	编码器加速度异常故障 Abnormal encoder acceleration	1.编码器本身数据发生异常 2.编码器线缆线序错误或接触不良 3.由于噪音干扰导致编码器数据异常 1. The encoder data are abnormal 2. The encoder cable is connected in the wrong sequence or in poor contact 3. Noise disturbance results in abnormal encoder data
0xFF60	电机堵转 Motor stalled	1.机械负载存在卡死现象或堵转现象 2.电机抱闸未释放 1. Mechanical load is jammed or blocked 2. Motor lock is not released

0xFF61	电机过热 Motor overheating	1.电机负载过大 2.电机运行环境温度过高，超过允许范围 3.电机过热保护热偶电阻值设置错误 4.电机温度传感器异常 5.驱动器内部异常 1. The motor load is too large 2. The motor operates in a temperature out of the allowable range 3. The thermocouple resistance for motor overheating protection is set incorrectly 4. The motor temperature sensor is abnormal 5. The driver is internally abnormal
0xFF62	增量式编码器 Z 信号异常 Incremental encoder Z signal abnormality	1.编码器本身数据发生异常 2.编码器线缆线序错误或接触不良 3.由于噪音干扰导致编码器数据异常 1. The encoder data are abnormal 2. The encoder cable is connected in the wrong sequence or in poor contact 3. Noise disturbance results in abnormal encoder data
0xFF63	写 EEPROM 数据异常 Abnormal EEPROM data writing	驱动器内部异常 Internal abnormality of drive
0xFF64	读 EEPROM 数据异常 Abnormal EEPROM data reading	驱动器内部异常 Internal abnormality of drive

0xFF65	能耗制动电路异常 Abnormal dynamic braking circuit	伺服参数设置的能耗制动选择，与能耗制动电阻实际接线不一致 The dynamic braking set via servo parameters is inconsistent with the actual wiring of the dynamic braking resistor
0xFF66	抱闸控制电路异常 Lock control circuit abnormality	1.电机抱闸接线短路或接触不良 2.电机抱闸内部发生短路或接触不良 3.驱动器内部异常 1. The motor lock is short-circuited or in poor contact 2. The motor lock is internally short-circuited or in poor contact 3. The driver is internally abnormal
0xFF67	CPU 过热 CPU overheating	1.驱动器内部温度采样电路异常 2.驱动器运行环境温度超出了允许工作范围 1. The temperature sampling circuit inside the driver is abnormal 2. The driver operates in a temperature out of the allowable range
0xFF68	CPU1 过载 CPU1 overloaded	1.驱动器运行受到噪音干扰 2.调试软件数据采集过大 3.驱动器内部电路异常 1. The driver is disturbed by noise during operation 2. The commissioning software collects excessive data 3. The inner circuit of the driver is abnormal
0xFF69	CPU2 过载 CPU2 overloaded	1.驱动器运行受到噪音干扰 2.调试软件数据采集过大 3.驱动器内部电路异常 1. The driver is disturbed by noise during operation 2. The commissioning software collects excessive data

		3. The inner circuit of the driver is abnormal
0xFF70	CPU1 握手失败 CPU1 handshaking failure	1.驱动器固件运行异常 2.驱动器内部异常 1. The driver firmware operates abnormally 2. The driver is internally abnormal
0xFF71	DriveMaster 通讯超时 DriveMaster communication timeout	1.驱动器调试线缆断开或接触不良 2.驱动器调试串口通讯受到干扰 1. The drive commissioning cable is broken or in bad contact 2. The drive commissioning serial port communication is disturbed
0xFF73	高速同步通讯异常 Abnormal high-speed synchronous communication	1.高速龙门同步通信线接线错误或这接触不良 2.由于噪音干扰导致高速龙门通信异常 3.驱动器内部异常 1. The synchronous communication cable of high-speed gantry is incorrectly connected or in poor contact 2. Noise disturbance results in abnormal high-speed gantry communication 3. The driver is internally abnormal
0xFF75	ESC 配置 EEPROM 异常 Abnormal ESC configuration EEPROM	驱动器内部异常 Internal abnormality of drive
0xFF76	ESC 内部访问错误 ESC internal	驱动器内部异常 Internal abnormality of drive

	access error	
0xFF77	伺服使能未准备好 Servo enabling not prepared	1.伺服 ON 时，驱动器处于实际电机且虚拟编码器模式 2.伺服 ON 时，编码器通信处于断开状态 3.伺服 ON 时，电机转速高于 30rpm 4.伺服 ON 时，STO 状态未解除 5.伺服 ON 时，直流母线电压过低，充电继电器未吸合 6.伺服 ON 时，动态制动状态未解除 7.驱动器内部异常 1. When the servo is on, the driver is in actual motor and virtual encoder mode 2. When the servo is on, the encoder communication is disconnected 3. When the servo is on, the motor runs at a speed higher than 30rpm 6. When the servo is on, the STO status is nor released 5. When the servo is on, the DC bus voltage is too low and the charging relay is not closed 6. When the servo is on, the dynamic braking status is nor released 7. The driver is internally abnormal
0xFF78	CPU2 握手失败 CPU2 handshaking failure	1.驱动器固件运行异常 2.驱动器内部异常 1. The driver firmware operates abnormally 2. The driver is internally abnormal
0xFF79	CPU1 主任务超时 CPU1 main task timeout	1.驱动器运行受到噪音干扰 2.调试软件数据采集过大 3.驱动器内部电路异常 1. The driver is disturbed by noise during operation 2. The commissioning software collects excessive data

		3. The inner circuit of the driver is abnormal
0xFF80	主电源掉电 Main power supply off	1.驱动器伺服 ON 状态下，发生了动力电源掉电 2.由于噪音干扰导致主电源掉电检测异常 3.伺服参数主电源掉电检测时间设置过小 1. When the driver servo is on, the power supply is off 2. Noise disturbance results in abnormality in main power supply off detection 3. The setting value of main power supply off detection time is too small
0xFF81	直流母线充电继电器异常 DC bus charging relay abnormality	驱动器内部充电继电器发生异常 The charging relay inside the driver is abnormal
0xFF82	CPU 内部错误 CPU inner error	1.驱动器固件运行异常 2.驱动器内部异常 1. The driver firmware operates abnormally 2. The driver is internally abnormal
0xFF83	位置实际值溢出 Actual position value overflow	位置模式下，当禁止无限位置控制时，位置实际值超出了允许的最大范围 In position mode, the actual position value exceeds the maximum permissible range when infinite position control is disabled
0xFF85	编码器内部异常 2 Inner abnormality 2 of encoder	编码器内部状态异常 The inner state of the encoder is abnormal
0xFF87	编码器内部异常	编码器内部状态异常

	3 Inner abnormality 3 of encoder	The inner state of the encoder is abnormal
0xFF8A	STO1 电路诊断异常 STO1 circuit diagnosis abnormality	1.STO1 触发或接线不良 2.驱动器内部异常 1. STO1 is triggered or poorly connected 2. The driver is internally abnormal
0xFF8B	STO2 电路诊断异常 STO2 circuit diagnosis abnormality	1.STO2 触发或接线不良 2.驱动器内部异常 1. STO2 is triggered or poorly connected 2. The driver is internally abnormal
0xFF8C	霍尔信号异常 Hall signal abnormality	1.霍尔传感器本身信号发生异常 2.霍尔传感器接线线序错误或接触不良 3.由于噪音干扰导致霍尔信号异常 1. The Hall sensor signal is itself abnormal 2. The Hall sensor cable is connected in the wrong sequence or in poor contact 3. Noise disturbance results in abnormal Hall signal
0xFF8D	编码器 AB 信号欠相异常 Encoder AB signal phase loss	1.霍尔传感器或 AB 编码器本身信号发生异常 2.霍尔传感器或 AB 编码器接线线序错误或接触不良 3.由于噪音干扰导致霍尔或 AB 编码器信号异常 1. The Hall sensor or AB encoder signal is itself abnormal 2. The Hall sensor or AB encoder cable is connected in the wrong sequence or in poor contact 3. Noise disturbance results in abnormal Hall sensor or or AB encoder signal

0xFF8E	第 2 位置跟随误差过大 Excessive position 2 following error	1.电机负载过大 2.控制参数不合适 3.抱闸释放动作异常 4.第 2 位置跟随误差过大判定阈值或判定时间设施过小 1. The motor load is too large 2. The control parameters are improper 3. The lock is released abnormally 4. The position 2 following error is too large, while the detection threshold or time is set too small
0xFF8F	STO 接线异常 STO wiring abnormality	STO1 或 STO2 触发或接线不良 STO1 or STO2 is triggered or poorly connected
0xFF90	第 2 速度跟随误差过大 Excessive speed 2 following error	1.电机负载过大 2.控制参数不合适 3.抱闸释放动作异常 4.第 2 速度跟随误差过大判定阈值或判定时间设施过小 1. The motor load is too large 2. The control parameters are improper 3. The lock is released abnormally 4. The speed 2 following error is too large, while the detection threshold or time is set too small
0xFF91	驱动器内部异常 2 Inner abnormality 2 of driver	驱动器内部异常 Internal abnormality of drive

7.3 报警及处理

Alarm and Treatment

序号 Item No.	故障名称 Description of Failure	故障代码 Failure Code	可能原因 Possible Reasons	处理建议 Handling Advice
1.	控制电源欠压告警 Control power undervoltage	0xE000	控制电源电压过低 The control power voltage is too low	控制电源恢复正常电压 Restore the control power voltage to the normal level
2.	环境温度过高 Excess environmental temperature	0xE001	环境温度过高 Environmental temperature is too high	降低环境温度，使温度处于驱动器正常工作的环境温度内 Decrease the environmental temperature so that it is within the normal operating temperature range of the driver
3.	STO 触发 STO triggered	0xE002	触发了急停开关 The emergency stop switch is triggered	急停开关恢复正常 Restore the emergency stop switch
4.	转矩监测饱和告警 Torque monitoring saturated	0xE003	伺服参数 0x20A7 设定值大于零且实际转矩电流超出了 0x20A7 设定值 The setting value of servo parameter	实际转矩电流低于 0x20A7 设定值 The actual torque current is smaller than the setting value of 0x20A7

			0x20A7 is larger than zero, and the actual torque current exceeds the setting value of 0x20A7 Value	
5.	CPU1 过载告警 CPU1 overloaded	0xE004	驱动器内部原因 The driver is internally abnormal	重启或更换驱动器 Restart or replace the drive
6.	CPU2 过载告警 CPU2 overloaded	0xE005	驱动器内部原因 The driver is internally abnormal	重启或更换驱动器 Restart or replace the drive
7.	更改了重上电有效参数 The effective parameter for repower-on changed .	0xE006	修改了重上电有效参数 The effective parameter for repower-on is changed	软复位或重启驱动器 Perform soft reset or restart the driver
8.	急停开关触发 Emergency stop switch triggered	0xE007	配置为“急停开关”的 DI 通道开关触发 The DI channel switch set as "emergency stop	配置为“急停开关”的 DI 通道开关恢复 Reset the DI channel switch set as "emergency stop switch"

			switch" is triggered	
9.	机械原点未标定 Mechanical origin not calibrated	0xE008	1. 驱动器未成功执行寻原点 2. 发生上电位置偏差过大故障，且用户在清除故障时判定机械原点已丢失 1. The driver fails to successfully perform origin seeking operation 2. The power-on position deviation is too large, and the user determines that the mechanical origin has been lost when eliminating the failure .	1. 驱动器成功执行回原点操作 2. 退出 PP 或 CSP 模式时 1. Ensure the driver successfully performs origin seeking operation 2. Exit PP or CSP mode
10.	电机过载告警 Motor overloaded	0xE009	1. 电机负载过大 1） 实际机械负载过大 2） 机械负载存在卡死现象 3） 电机抱闸未释放	1. 减小电机实际机械负载 2. 增大电机运行时的加减速时间 3. 检查机械负载传动方式，确保无卡死等现象 4. 检查电机抱闸接线确保接线可靠

			2. 电机加减速时间设置过小 3. 电机参数设置错误 4. 驱动器内部电流采样电路异常 5. 驱动器抱闸电路异常 1. The motor load is too large 1) The actual mechanical load is too large 2) Mechanical load is jammed 3) The motor lock is not released 2. Motor acceleration and deceleration time is set too small 3. Motor parameters are incorrectly set 4. The current sampling circuit inside the driver is abnormal 5. The lock circuit of the driver is	5. 检查电机参数， 确保电机参数设置正确 6. 更换大容量电机 7. 更换驱动器 1. Reduce the actual mechanical load of the motor 2. Extend motor acceleration and deceleration time during its operation . 3. Check the transmission of mechanical load to ensure that the load is not jammed 4. Check the wiring of motor lock to ensure it is reliable 5. Check motor parameters to ensure they are set correctly 6. Use a larger capacity motor 7. Replace the driver

			abnormal	
11.	转速限制告警 RPM out of limit	0xE010	1. 速度模式下，速度目标值超出了允许最高转速 2. 位置模式下，位置调节器输出超出了允许最高转速 3. 伺服参数设置不合理 1. In speed mode, the target speed value exceeds the maximum allowable speed 2. In position mode, the output of position regulator exceeds the maximum allowable speed 3. The setting values of servo parameters are unreasonable	1. 减小速度目标值或速度规划值 2. 更换最高转速的电机 3. 根据实际情况重新设置参数 0x607F 最大规划速度 1. Reduce the target value or planned value 2. Use a motor with a higher speed 3. According to the actual situation, reset the parameter 0x607F maximum planned speed
12.	直流母线欠压告警 DC bus undervoltage	0xE011	1. 驱动器动力输入电源电压过低 2. 驱动器内部电压采样电路异常 1. Driver's power	1. 调整驱动器动力输入电源至允许范围 2. 更换驱动器 1. Adjust the driver's power input power supply to a value within the allowable range

			input voltage is too low 4. The voltage sampling circuit inside the driver is abnormal	2. Replace the driver
13.	故障历史记录异常 Failure record abnormality	0xE012	驱动器内部原因 The driver is internally abnormal	软复位或重启驱动器 Perform soft reset or restart the driver
14.	AD 校正系数无效 Invaild AD correction coefficient	0xE013	驱动器内部原因 The driver is internally abnormal	软复位或重启驱动器 Perform soft reset or restart the driver
15.	CoE 通讯参数异常 CoE communication parameter abnormality	0xE014	驱动器内部原因 The driver is internally abnormal	软复位或重启驱动器 Perform soft reset or restart the driver
16.	伺服参数恢复默认值 Servo parameters restored to the default values	0xE015	1. 执行了恢复参数出厂值操作 2. 导入了伺服参数应用版本为 0 的参数 1. The setting values of parameters are restored to the	应确保使用的参数正确， 并且伺服参数应用版本非 0 Ensure that correct parameters are used and the application version number of the parameters is not 0

			factory setting values 2. The application version number of the servo parameters imported is 0	
17.	不支持设定控制模式 Not support set control mode	0xE016	1. 控制器设定了驱动器不支持的控制模式 2. 控制器与伺服通讯建立后， 未指定控制模式 1. The control mode set by the controller is not supported by the driver 2. The control mode is not specified after the communication between controller and servo is established .	上位机设定正确的控制模式 Set a correct control mode through the upper computer
18.	第一编码器电池欠电压告警 Primary encoder battery	0xE017	1. 编码器未外接电池或电池接线不良 2. 编码器电池欠电压 3. 编码器电池线正负接反或者破皮对	1. 检查编码器电池接线并确保接线可靠 2. 更换电池 3. 若不想使用该功能，可通过修改参数 0x201B 或 0x201C 禁止编码器电池低电压检出功

	undervoltage		地短路 1. The encoder is not connected or is poorly connected with the external battery 2. The encoder battery is undervoltage 3. The encoder battery wire is connected inversely or the broken skin is shorted to the ground	能 1. Check encoder battery wiring and ensure it is reliable 2. Replace the battery 3. If the encoder battery undervoltage detection function is not desired, it can be disabled by changing the parameter 0x201B or 0x201C
19.	第二编码器电池欠电压告警 Secondary encoder battery undervoltage	0xE018	1. 编码器未外接电池或电池接线不良 2. 编码器电池欠电压 3. 编码器电池线正负接反或者破皮对地短路 1. The encoder is not connected or is poorly connected with the external battery 2. The encoder battery is	1. 检查编码器电池接线并确保接线可靠 2. 更换电池 3. 若不想使用该功能，可通过修改参数 0x201B 或 0x201C 禁止编码器电池低电压检出功能 1. Check encoder battery wiring and ensure it is reliable 2. Replace the battery 3. If the encoder battery undervoltage detection function is not desired, it can be disabled by changing the parameter

			undervoltage 3. The encoder battery wire is connected inversely or the broken skin is shorted to the ground	0x201B or 0x201C
20.	驱动器内部告警 Inner abnormality of driver	0xE019	驱动器出厂测试未通过 The driver has failed the factory test	更换驱动器 Replace drive
21.	第一编码器通信异常告警 Abnormal primary encoder communication Alarm	0xE020	1. 编码器发生故障 2. 电机编码器接线异常（比如断线） 3. 电机编码器接线受到干扰（比如未采用屏蔽双绞线；与电机动力线耦合在一起；驱动器地线未可靠连接等） 4. 驱动器周围存在强干扰源 1. The encoder has failed 2. The motor encoder is	1. 更换编码器 2. 检查电机编码器接线并确保接线规范正确 3. 编码器线缆，电机动力线缆增加磁环 4. 可靠的连接驱动器地线 5. 移除驱动器周围强干扰源，或者驱动器与周围强干扰源独自供电 1. Replace the encoder 2. Check the wiring of the motor encoder and ensure the wiring is correct 3. Add a magnetic ring onto the encoder cable and the motor power cable 4. Reliably earth the driver

			abnormally wired (e.g. disconnected) 3. The motor encoder wiring is disturbed (for example, shielded twisted pair is not used; the motor encoder wire is coupled with the motor power wire; the driver is not reliably earthed, etc.) 4. There exists a strong interference source around the driver	5. Remove the strong interference source around the driver, or respectively supply power to the driver and the surrounding strong interference source
22.	第二编码器通信异常告警 Abnormal secondary encoder communication Alarm	0xE021	1. 编码器发生故障 2. 电机编码器接线异常（比如断线） 3. 电机编码器接线受到干扰（比如未采用屏蔽双绞线；与电机动力线耦合在一起；驱动器地线未可靠连接等） 1. Replace the encoder 2. Check the wiring of the motor	1. 更换编码器 2. 检查电机编码器接线并确保接线规范正确 3. 编码器线缆，电机动力线缆增加磁环 4. 可靠的连接驱动器地线 5. 移除驱动器周围强干扰源，或者驱动器与周围强干扰源独

			4. 驱动器周围存在强干扰源 1. The encoder has failed 2. The motor encoder is abnormally wired (e.g. disconnected) 3. The motor encoder wiring is disturbed (for example, shielded twisted pair is not used; the motor encoder wire is coupled with the motor power wire; the driver is not reliably earthed, etc.) 4. There exists a strong interference source around the driver	encoder and ensure the wiring is correct 3. Add a magnetic ring onto the encoder cable and the motor power cable 4. Reliably earth the driver 5. Remove the strong interference source around the driver, or respectively supply power to the driver and the surrounding strong interference source
23.	第一编码器通信超时告警 Primary	0xE022	1. 编码器发生故障 2. 电机编码器接线异常（比如断线）	1. 更换编码器 2. 检查电机编码器接线并确保接线规范正确 1. Replace the encoder

	encoder communicatio n timeout Alarm		1. The encoder has failed 2. The motor encoder is abnormally wired (e.g. disconnected)	2. Check the wiring of the motor encoder and ensure the wiring is correct
24.	第二编码器通信超时告警 Secondary encoder communicatio n timeout Alarm	0xE023	1. 编码器发生故障 2. 电机编码器接线异常（比如断线） 1. The encoder has failed 2. The motor encoder is abnormally wired (e.g. disconnected)	1. 更换编码器 2. 检查电机编码器接线并确保接线规范正确 1. Replace the encoder 2. Check the wiring of the motor encoder and ensure the wiring is correct
25.	第一编码器数据异常告警 Abnormal primary encoder data Alarm	0xE024	1. 编码器故障 2. 驱动器内部原因 1. The encoder has failed 2. The driver is internally abnormal	1. 更换编码器 2. 软复位或重启驱动器 1. Replace the encoder 2. Perform soft reset or restart the driver
26.	第二编码器数据异常告警 Abnormal	0xE025	1. 编码器故障 2. 驱动器内部原因 1. The encoder has failed	1. 更换编码器 2. 软复位或重启驱动器 1. Replace the encoder 2. Perform soft reset or restart the

	secondary encoder data Alarm		2. The driver is internally abnormal	driver
27.	位置限位告警 Position out of limit	0xE026	1. 位置目标值超出了软限位范围 2. 触发了硬限位开关 1. The target position value is out of the soft limit range . 2. The hard limit switch is triggered	1. 使位置值处于软限位范围内 2. 检查限位开关状态并确保硬限位开关未触发 1. Ensure the target position value is within the soft limit range 2. Check the state of the hard limit switch and make sure it is not triggered
28.	位置规划参数异常告警 Abnormal position planning parameter .	0xE027	1. 规划加速度，规划减速度，规划速度中任意一个设置为 0 2. 规划减速度设置过小 1. Any one of the planned acceleration, planned deceleration and planned speed is set to 0 2. The setting value of planned deceleration is too	合理设置规划加速度，规划减速度，规划速度等参数 Reasonably set the planned acceleration, planned deceleration and planned speed

			small	
29.	SDO 写入失败告警 SDO writing failure	0xE028	写 SDO 对象失败 SDO fails to be written	执行故障清除命令 Execute the failure clearing command
30.	寻原点配置错误 Origin seeking configuration error	0xE029	寻原点相关参数设置错误 The parameters relating to origin seeking are incorrectly set	正确设置寻原点相关参数 Correctly set the parameters relating to origin seeking
31.	编码器内部告警 Inner abnormality of encoder	0xE030	编码器电池电压过低或未接电池 The encoder battery voltage is too low or the encoder is not connected with a battery	编码器电池电压恢复正常， 执行编码器清零 Restore the encoder battery voltage and execute encoder reset
32.	能耗制动电阻过载告警 Dynamic braking resistor overloaded .	0xE031	1. 电机频繁进行快速停止操作导致能耗制动能量过大 2. 伺服参数 0x2131， 0x2132，0x2133 等设置错误 1. The motor is rapidly stopped frequently resulting in excessively high	1. 正确设置伺服参数 0x2131，0x2132， 0x2133 2. 改变电机运行工况，避免电机频繁进行快速停止操作，比如延长电机停止时间 1. Correctly set the servo parameters 0x2131, 0x2132 and 0x2133 2. Change the operating conditions of the motor to avoid the motor from being rapidly

			dynamic braking energy 2. The servo parameters 0x2131, 0x2132 and 0x2133 are incorrectly set	stopped frequently. For example, extend the time before the motor is stopped

8 应急处理措施
8 Emergency Response

8.1 分离人员与带电体

Separate Victim from Live Part

若发生人员触电事故，首先应保证人员与带电体分离，且莫直接拉拽触电人员，应按以下做法将人员与带电体分离：

In case of an electric shock accident, separate the victim from live part first as stated below. Do not directly touch the victim.

1、关掉总电源，拉开闸刀开关或拔掉融断器；

1. Turn off the main power supply and open the knife switch or remove the fuse;

2、使用有绝缘柄的电工钳，将电线切断；

2. Cut off the wire using wire nippers with an insulating handle;

3、用绝缘物从带电体上拉开触电者。

3. Use an insulating material to separate the victim from the live part.

8.2 急救

First-aid Measures

现场救护当触电者脱离电源后，如果神志清醒，使其安静休息；如果严重灼伤，应送医院诊治。如果触电者神志昏迷，但还有心跳呼吸，应该将触电者仰卧，解开衣服，以利呼吸；周围的空气要流通，要严密观察，并迅速请医生前来诊治或送医院检查治疗。如果触电者呼吸停止，心脏暂时停止跳动，但尚未真正死亡，要迅速对其人工呼吸和胸外按压。具体操作方法和步骤如下：

If the victim is conscious after being separated from the live part, allow him/her to rest in a quiet environment; if the victim gets severe burns, send him/her to hospital. If the victim is unconscious with heartbeat and breath, lay him/her on his/her back and unbutton his/her clothes to facilitate breathing. Keep

the surrounding ventilated. Closely monitor the victim and rapidly request treatment or send the victim to hospital. If the victim stops breathing and his/her heart temporarily stops beating but he/she has not truly become dead, rapidly carry out artificial respiration and external chest compression. The method and steps are detailed below:

将触电者仰卧在木板或硬地上，解开领口、裤带，使其头部尽量后仰，鼻孔朝天，使舌根不致阻塞气道。再用手掰开其嘴，取出口腔里的假牙、呕吐物、粘液等，畅通气道。然后，一只手托起他的下颌，另一只手捏紧其鼻子，人工呼吸约 2s，使被救者胸部扩张；接着放松口、鼻，使其胸部自然缩回，呼气约 3s。如此反复进行，每分钟吹气约 12 次。如果无法把触电者的口张开，则改用口对鼻人工呼吸法。此时，吹气压力应稍大，时间也稍长，以利空气进入肺内。2

Lay the victim on his/her back on a wooden plate or solid ground. Unfasten his/her collar and trouser belt. Make his/her head tilt backward as much as possible and his/her nostril point towards sky so that the root of tongue will not obstruct the air passage. Manually open the victim's mouth and take out the dentures, vomitus and mucus from his/her mouth so that the air passage is unobstructed. Lift the victim's lower jaw with one hand and seal his/her hose by pinching his/her nostrils with the other hand. Execute artificial respiration for about 2 s to expand the victim's chest. Then release the victim's mouth and nose to allow his/her chest retract naturally. Wait 3 s for the victim to exhale. Repeat the foregoing actions. Give artificial respiration about 12 times per minute. If the victim's mouth cannot be opened, give artificial respiration through his/her nose. In such case, exert higher respiration pressure for a longer period to facilitate air flow into the victim's lung. 2

9 机器人报废处理
9 Disposal of Waste Robots

9.1 拆除、报废阶段

Removal and Disposal

1、拆除、报废处理开机前应保证各部分接线正常，检查时应用万用表测量，且检查人员应戴绝缘手套。

1. Make sure all connections are normal before commencement of removal and disposal. Measure the voltage with a multimeter. Ensure the inspectors wear insulating gloves.

2、机器人在提升过程中人员尽量远离，同时会将机器人的姿态收低，使其重心降低，不易倾覆。

2. When the robot is being lifted, stay away and move all parts to a lower position to lower the center of gravity so that the robot will not easily tip over.

3、机器人报废后，应将其所有姿态收低，在运输车辆上要固定妥当，必要时进行拆解后运输。

3. After identifying the robot as a waste robot, move all parts to a lower position to lower the center of gravity. Securely fix the robot on the truck. Disassemble the robot before transportation, if necessary.

4、拆除电机应有专业人员进行，并在拆除电机的之前，释放各个轴，必要时借助吊具或升降平台进行拆除。

4. Only allow professional technicians to remove the motor. Release the shafts before removal. Use a sling or lifting platform when necessary.

5、用剪切枪拆除之前，应先卸下电池。

5. Take out the batteries before removing the motor with shear gun.

10. 电气原理图
Electrical Diagram

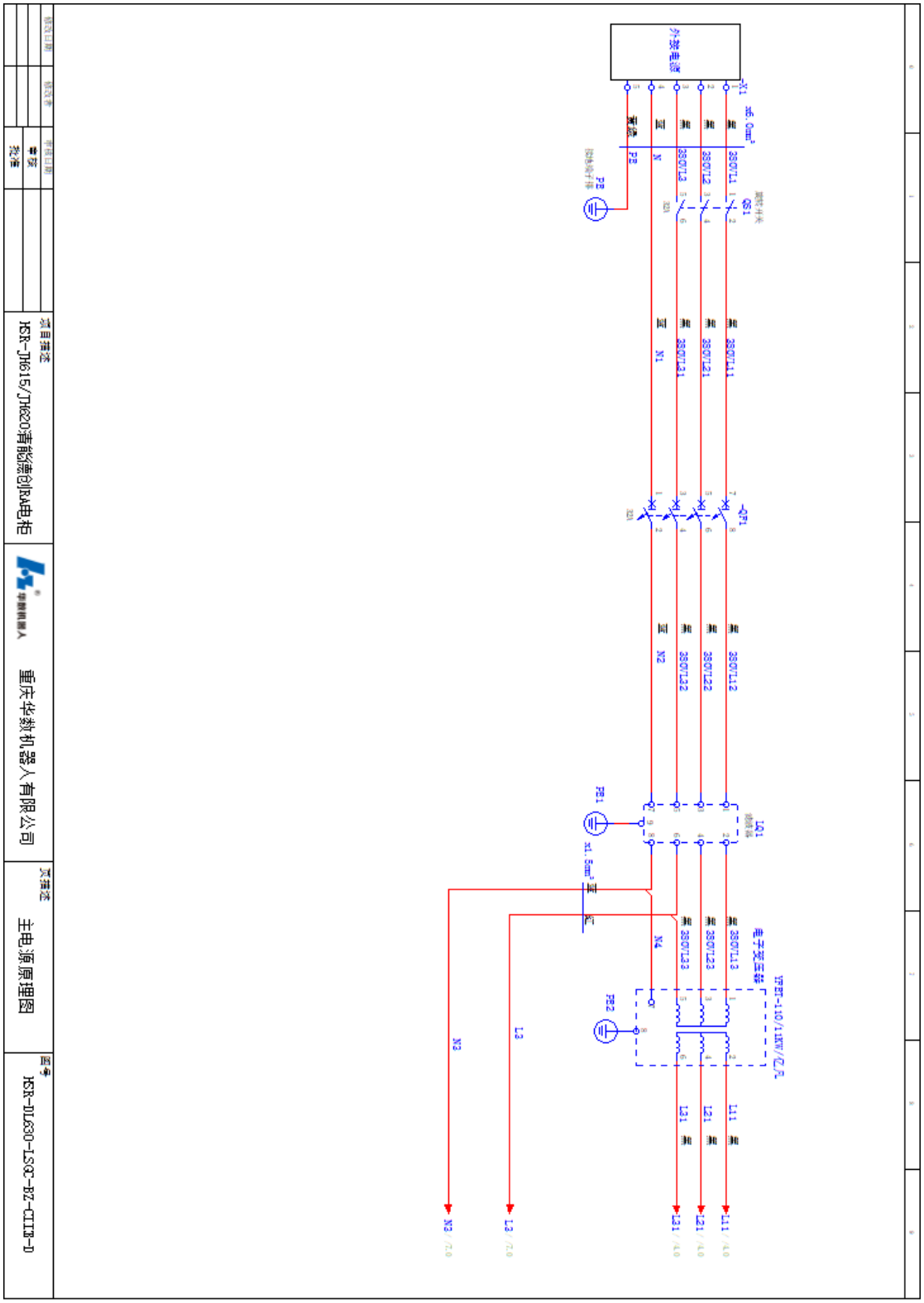

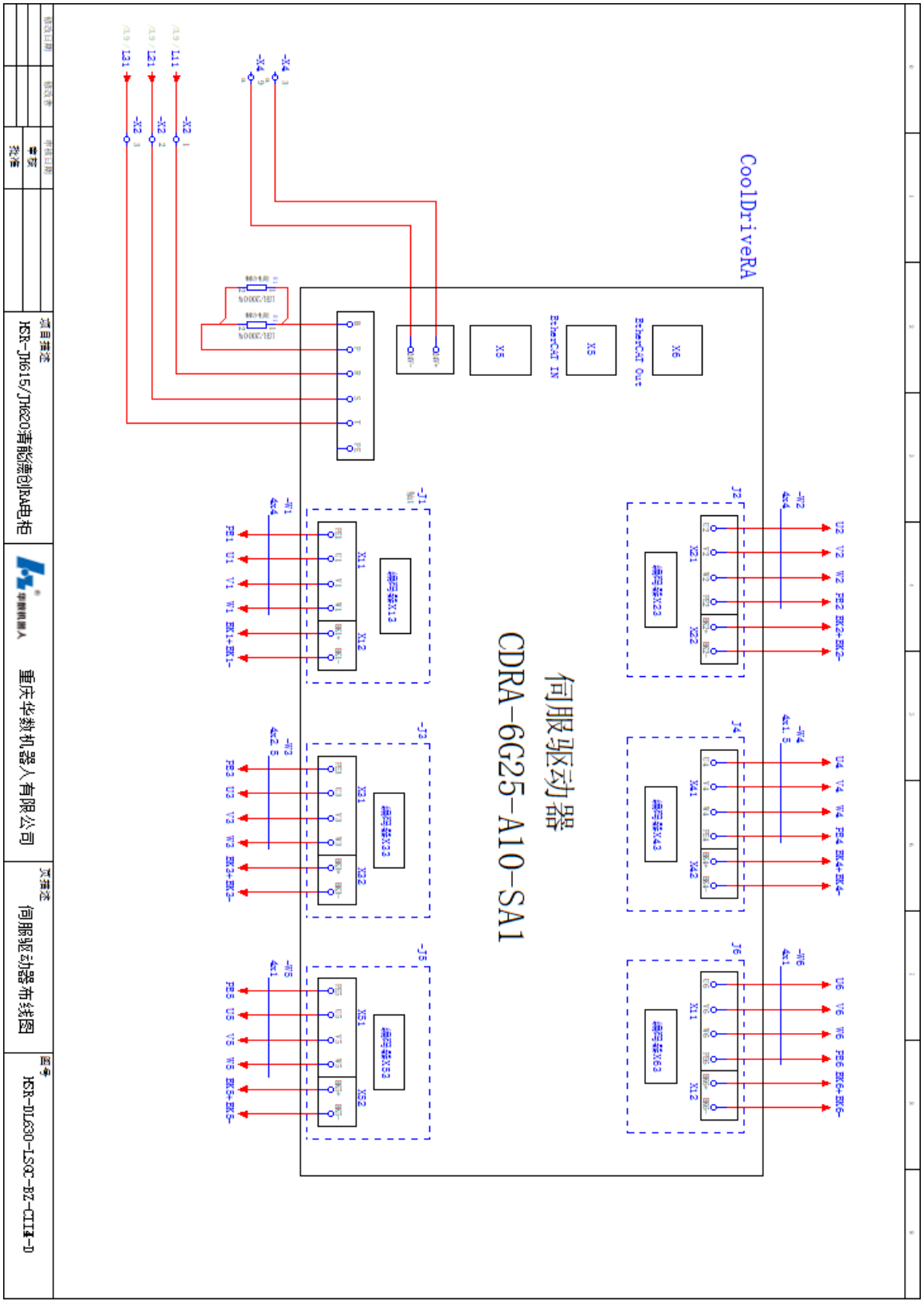
CoolDriveRA
伺服驱动器
CDRA-6G25-A10-SA1
EtherCAT IN
EtherCAT Out
X5
X6
HSR-JH615/JH620清能德创RA电柜
重庆华数机器人有限公司
伺服驱动器布线图
HSR-DL630-LSGC-BZ-CIII4-D

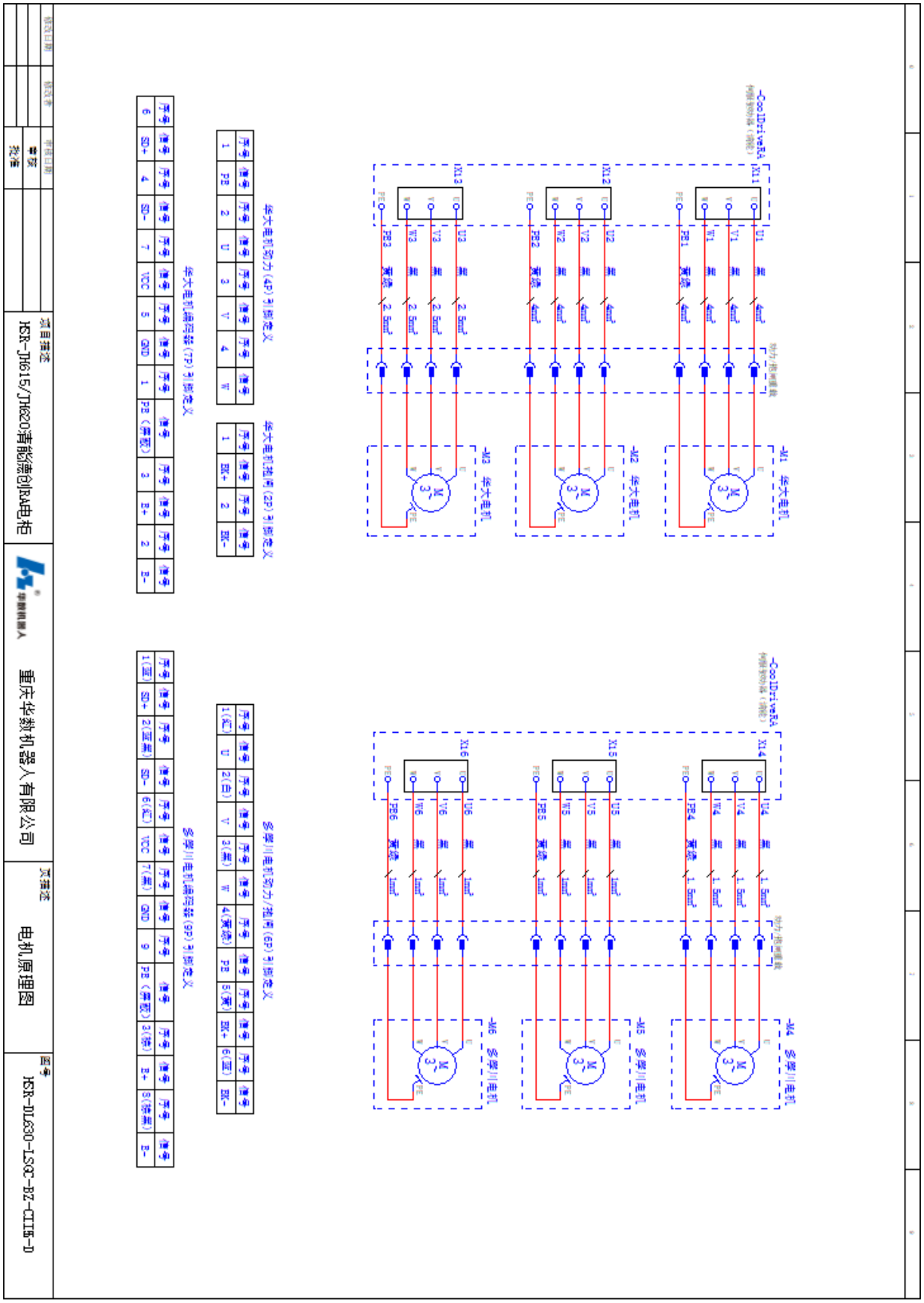
HSR-JH615/JH620清能德创RA电柜
重庆华数机器人有限公司
电机原理图
HSR-DL630-LSGC-BZ-CLIE-D

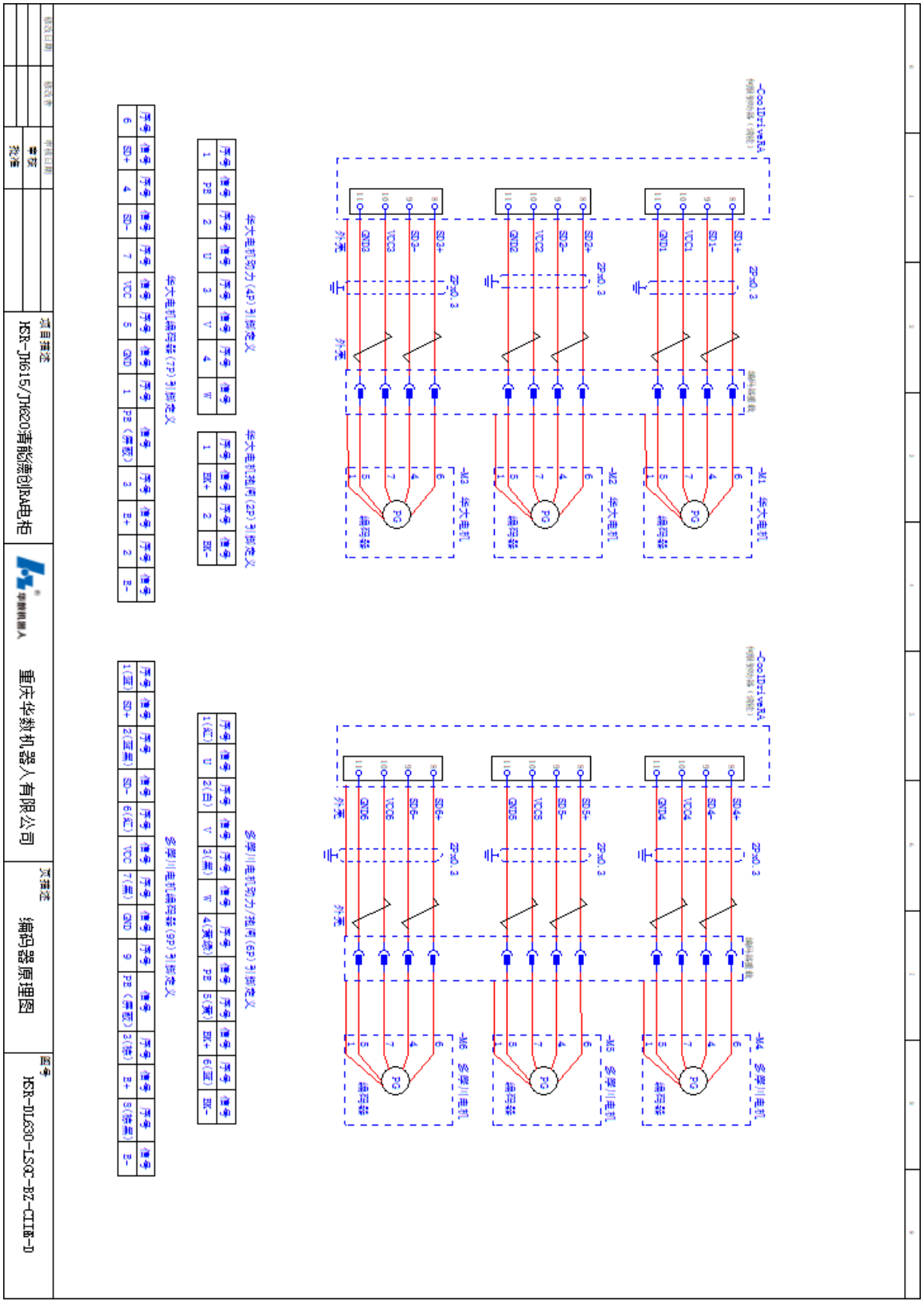
HSR-JH615/JH620清能德创RA电柜
重庆华数机器人有限公司
编码器原理图
HSR-DL630-LSGC-BZ-CLIE-D

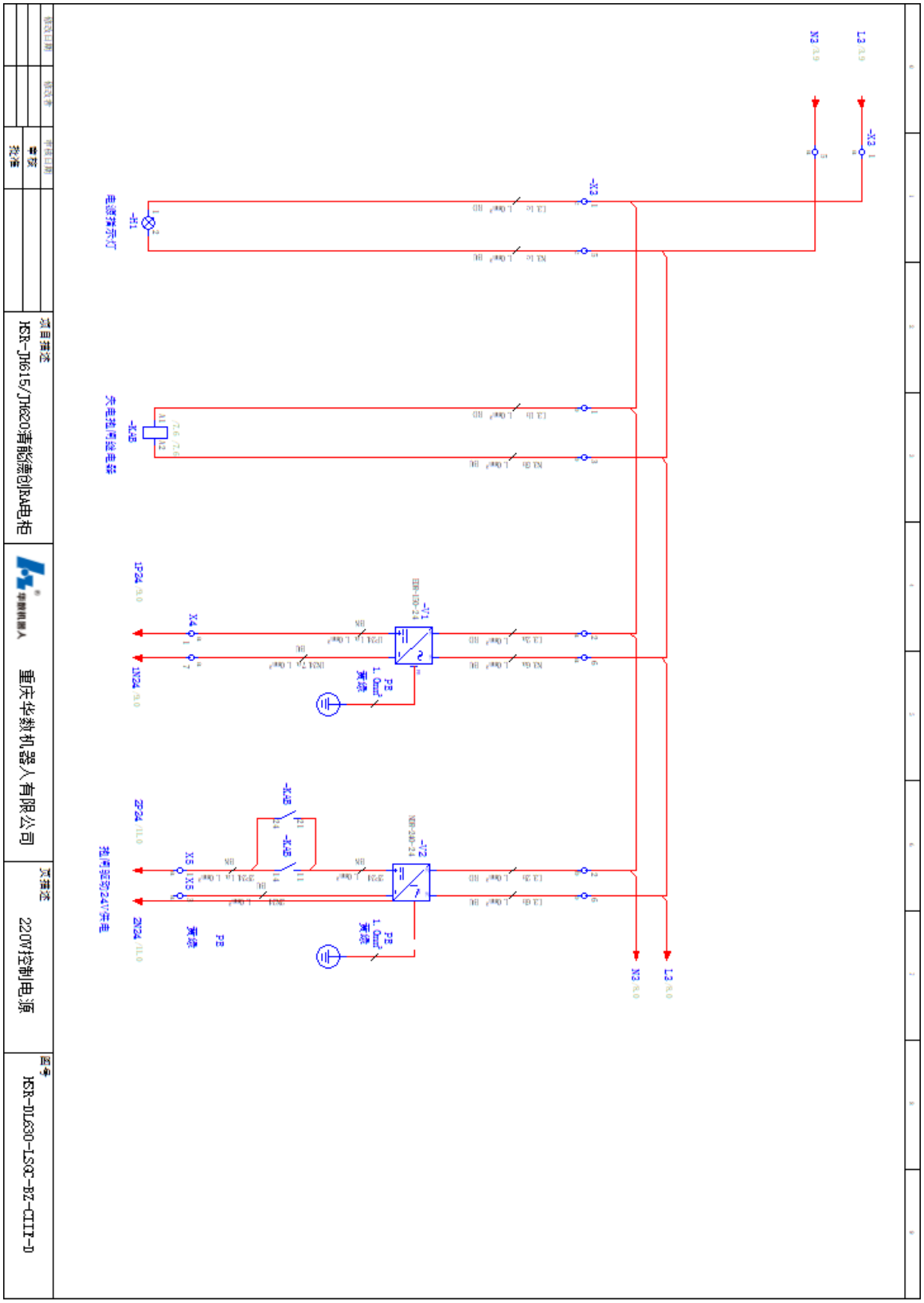
HSR-JH615/JH620清能德创R4电柜
重庆华数机器人有限公司
220V控制电源
HSR-DL630-LSQ-BZ-CLII-D

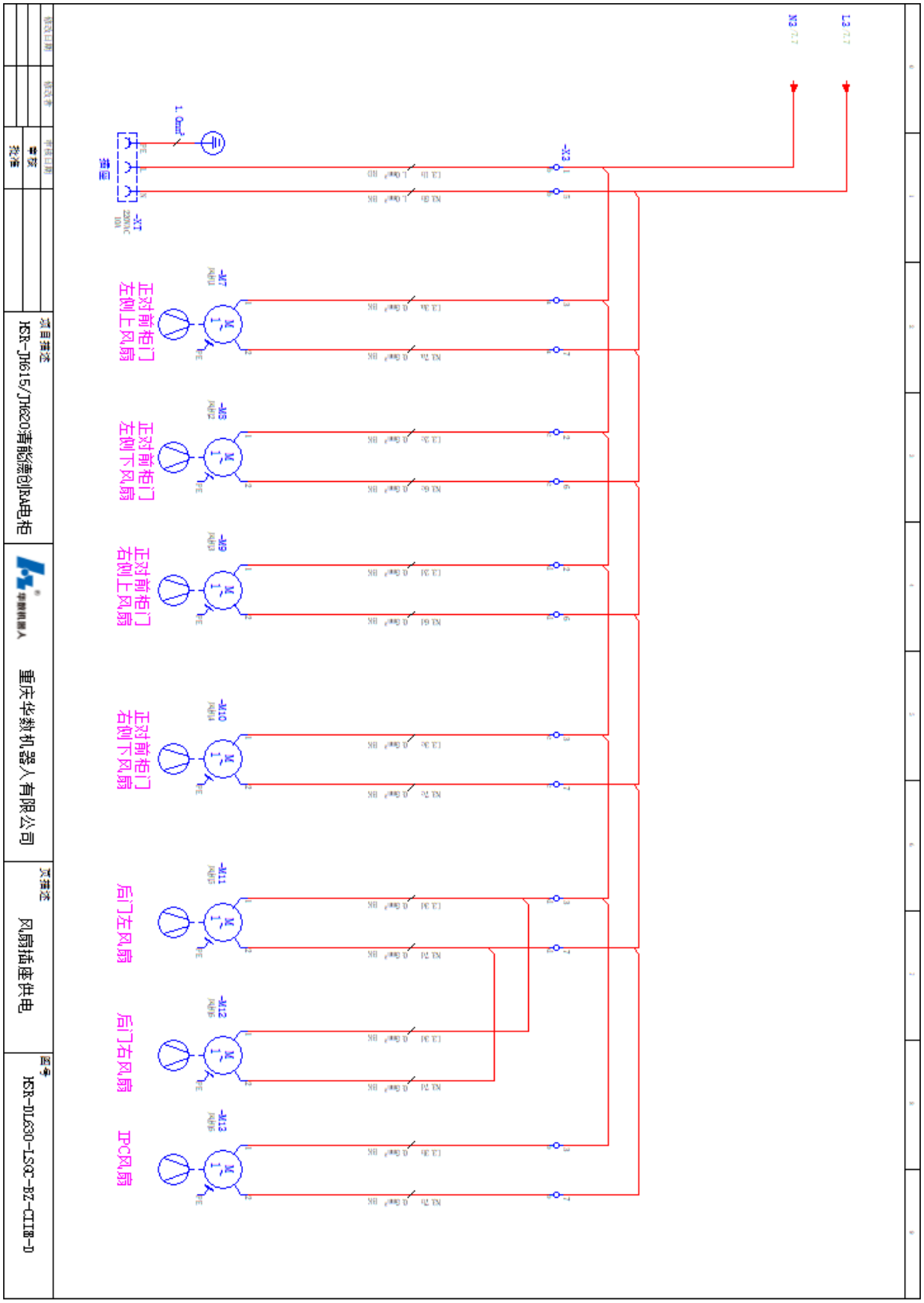
HSR-JH615/JH620清能德创机电柜
重庆华数机器人有限公司
风扇插座供电
HSR-DL630-1500-BZ-CLIMB-D
正对前柜门左侧上风扇
正对前柜门左侧下风扇
正对前柜门右侧上风扇
正对前柜门右侧下风扇
后门左风扇
后门右风扇
IPC风扇

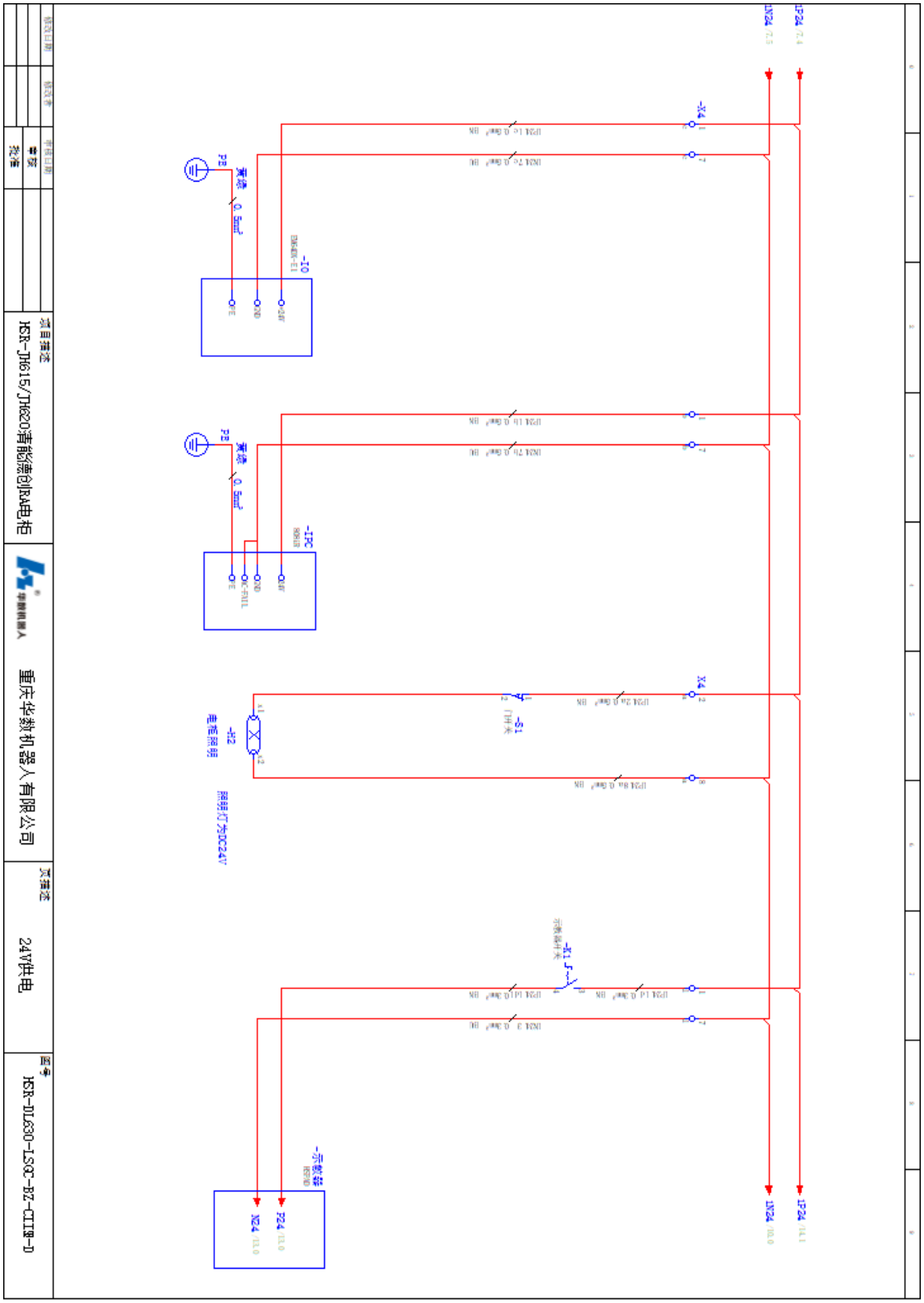
HSR-JH615/JH620清能德创机电柜
重庆华数机器人有限公司
24V供电
HSR-DL630-LSQ-BZ-CLIB-D

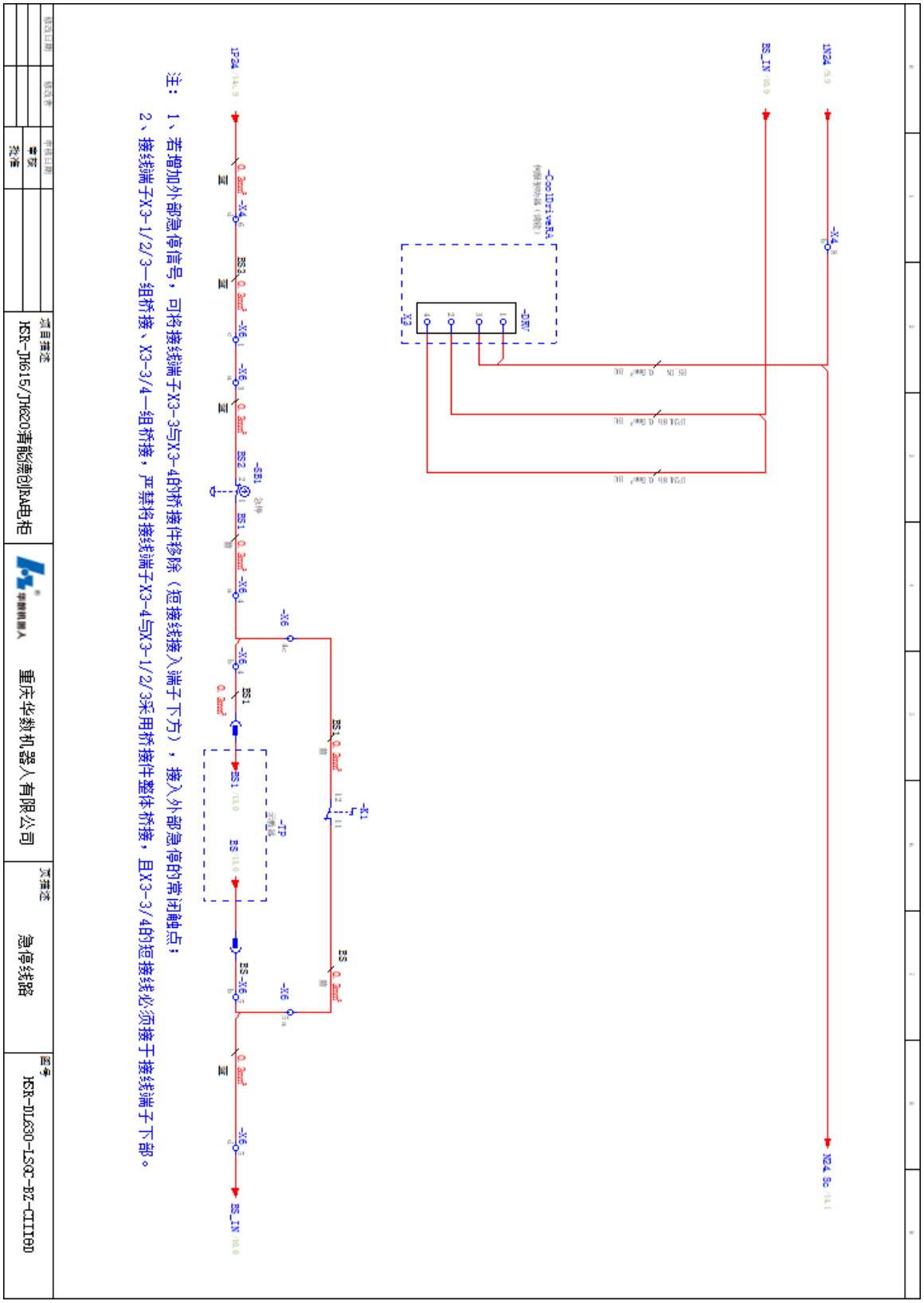
注：
1、若增加外部急停信号，可将接线端子X3-3与X3-4的桥接件移除（短接线接入端子下方），接入外部急停的常闭触点；
2、接线端子X3-1/2/3一组桥接、X3-3/4一组桥接，严禁将接线端子X3-4与X3-1/2/3采用桥接件整体桥接，且X3-3/4的短接线必须接于接线端子下部。
HSR-JH615/JH620清能德创机电柜
重庆华数机器人有限公司
急停线路
HSR-DL630-LSQ-BZ-CIIIE0D

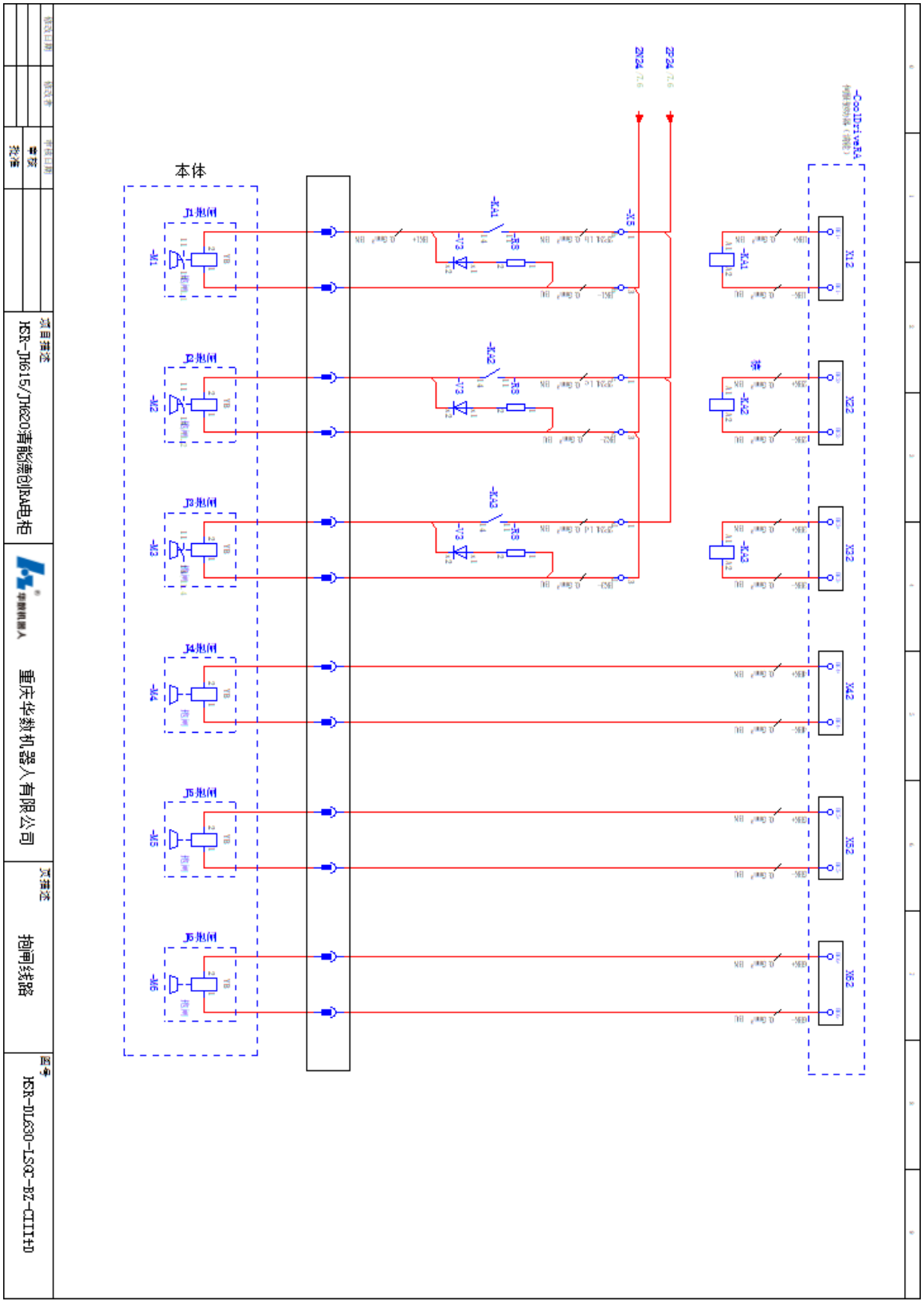
本体
J1抱闸
J2抱闸
J3抱闸
J4抱闸
J5抱闸
J6抱闸
-M1
-M2
-M3
-M4
-M5
-M6
-KA1
-KA2
-KA3
-V3
-R8
-X5
2N24
ZP24
-CoolDriveRA
X12
X22
X32
X42
X52
X62
HSR-JH615/JH620清能德创RA电柜
重庆华数机器人有限公司
抱闸线路
HSR-DL630-LSGC-BZ-CIII+D

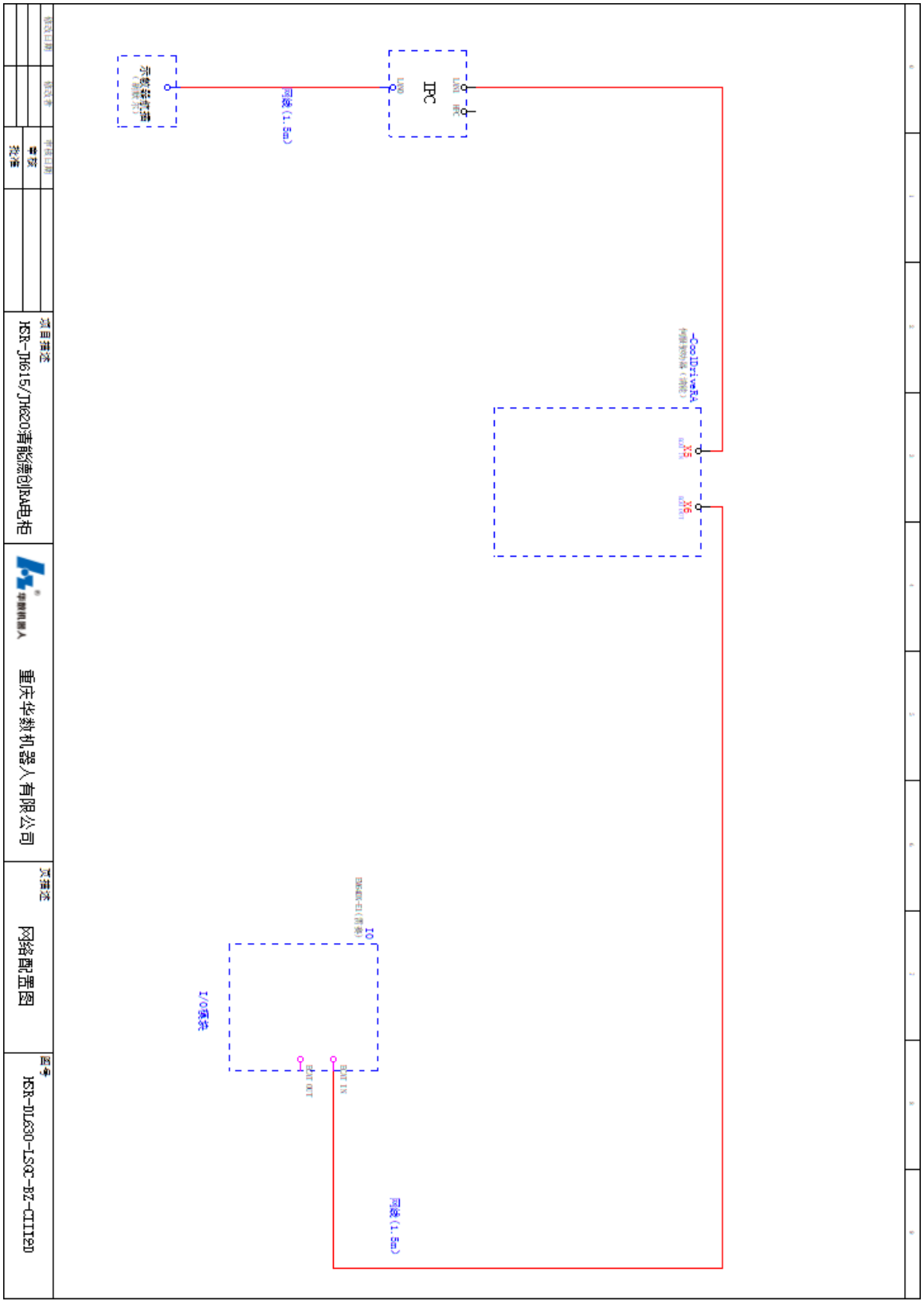
IPC
LIN0
LIN1
HPC
网线(1.5m)
-CooIDriveRA
X5
X6
I0
EMC4DX-E1(西装)
EXT IN
EXT OUT
I/O模块
网线(1.5m)
项目描述
HSR-JH615/JH620清能德创RA电柜
重庆华数机器人有限公司
页描述
网络配置图
图号
HSR-DL630-LSGC-BZ-CIII2D

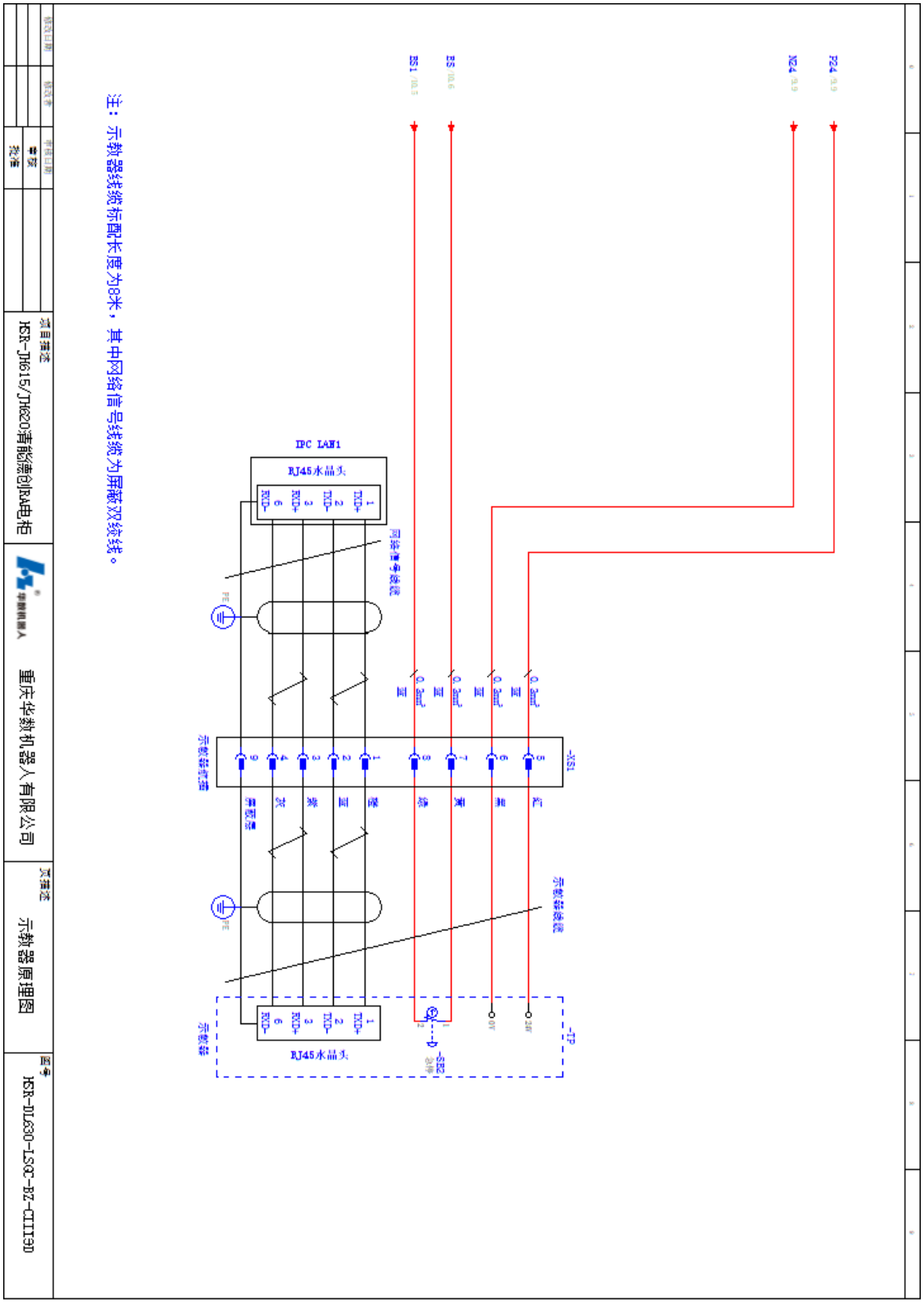
注：示教器线缆标配长度为8米，其中网络信号线缆为屏蔽双绞线。
IPC LAN1
RJ45水晶头
RJ45水晶头
HSR-JH615/JH620清能德创R4电柜
重庆华数机器人有限公司
示教器原理图
HSR-DL630-LSQ-BZ-CIII30

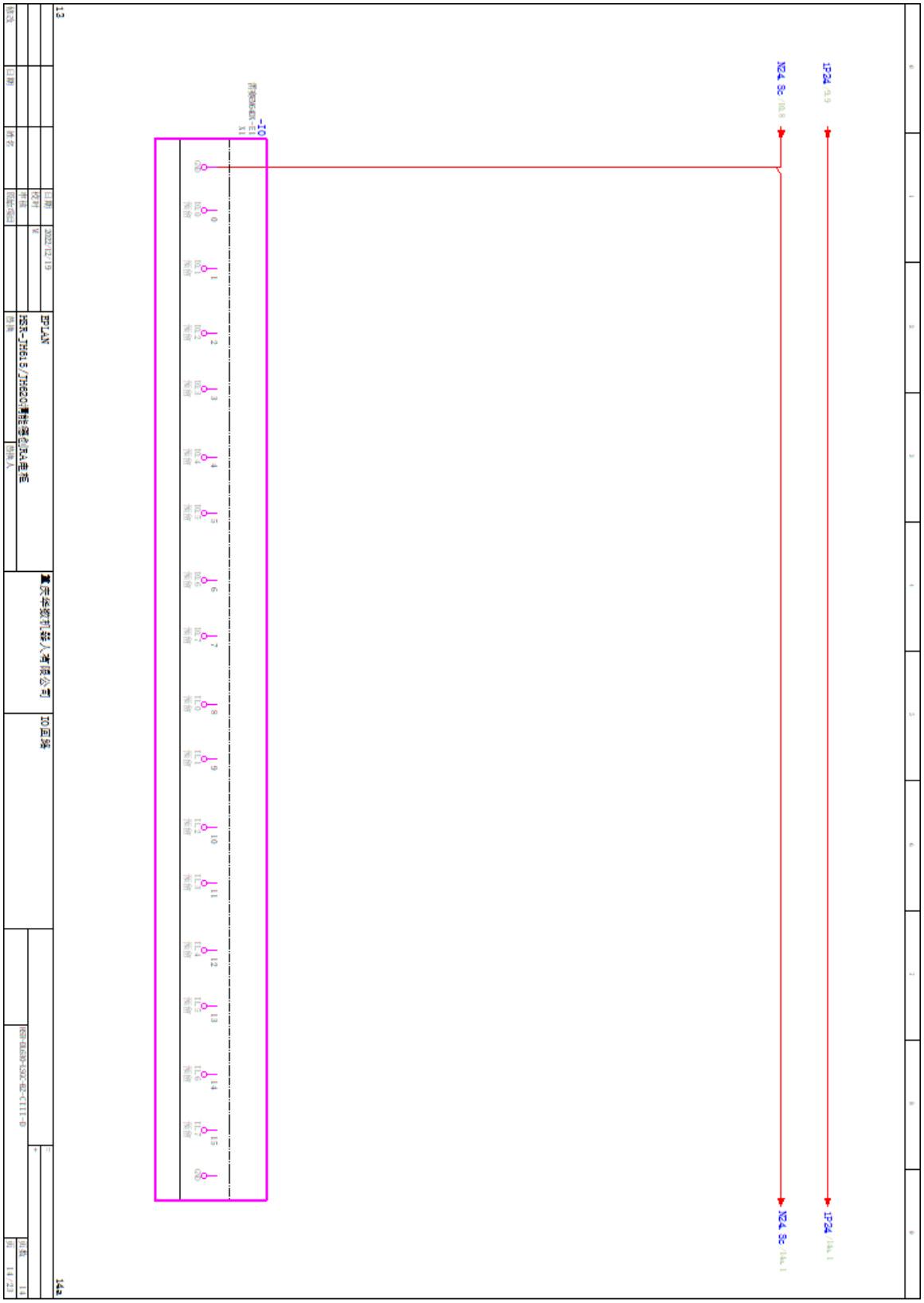

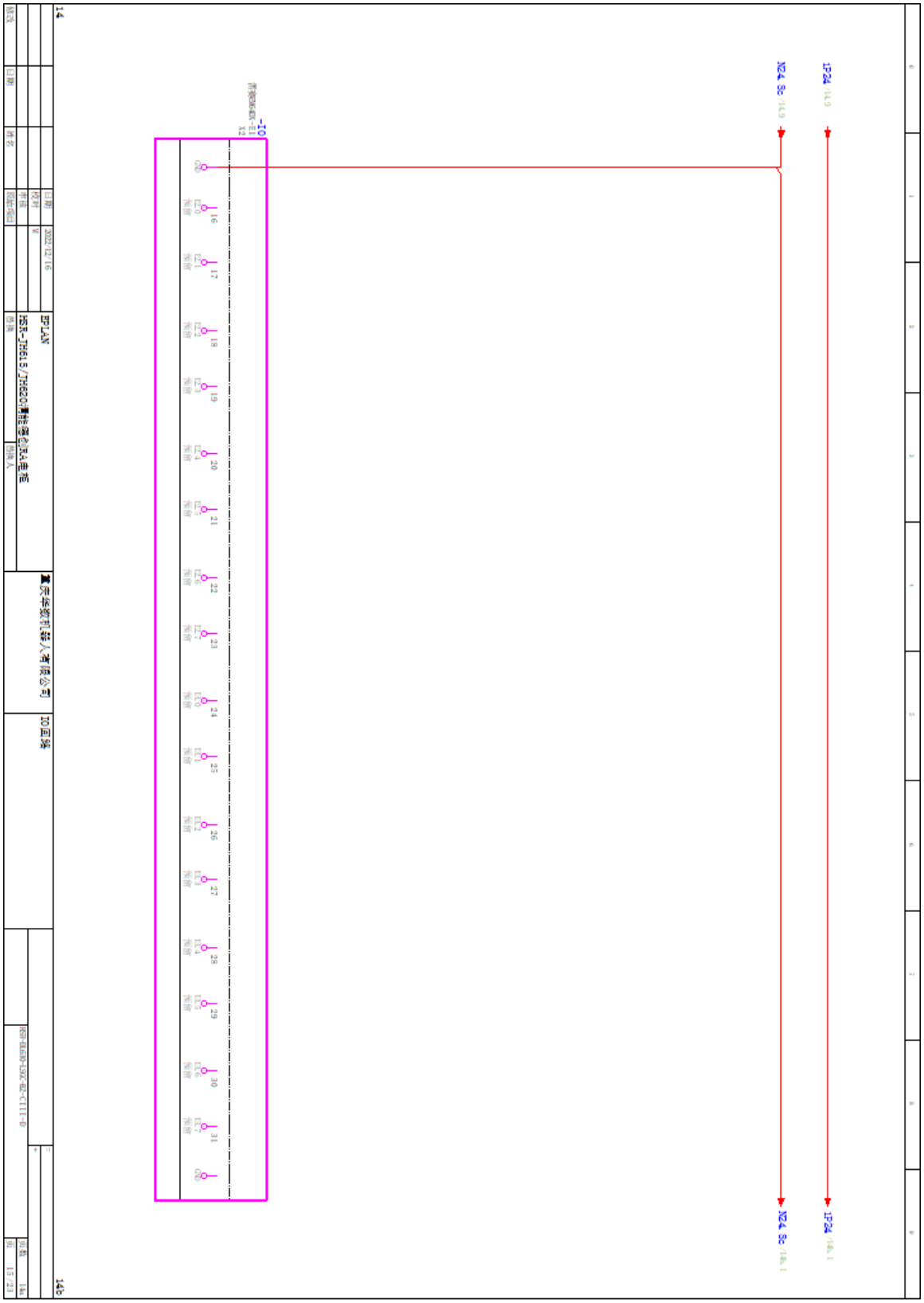

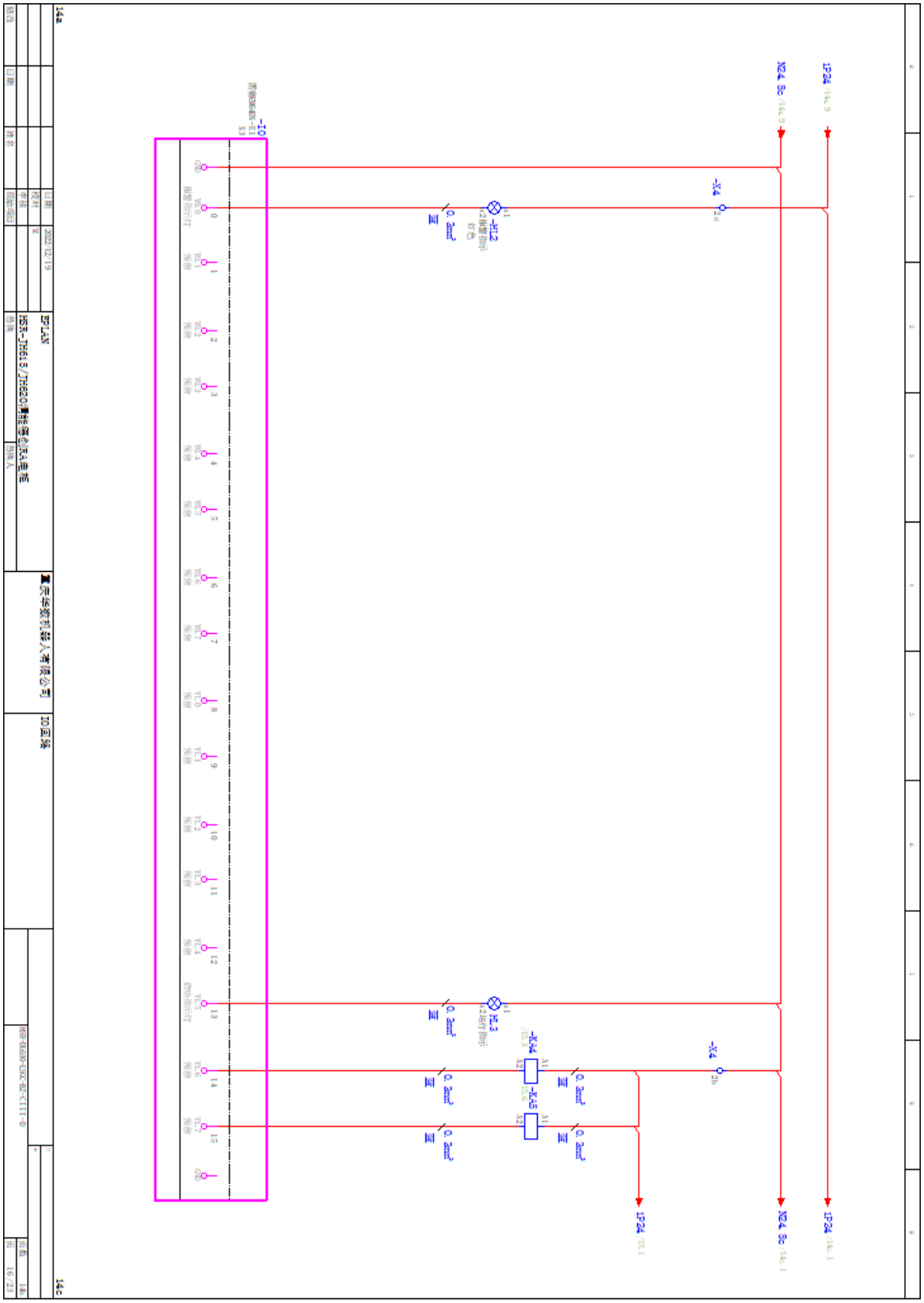

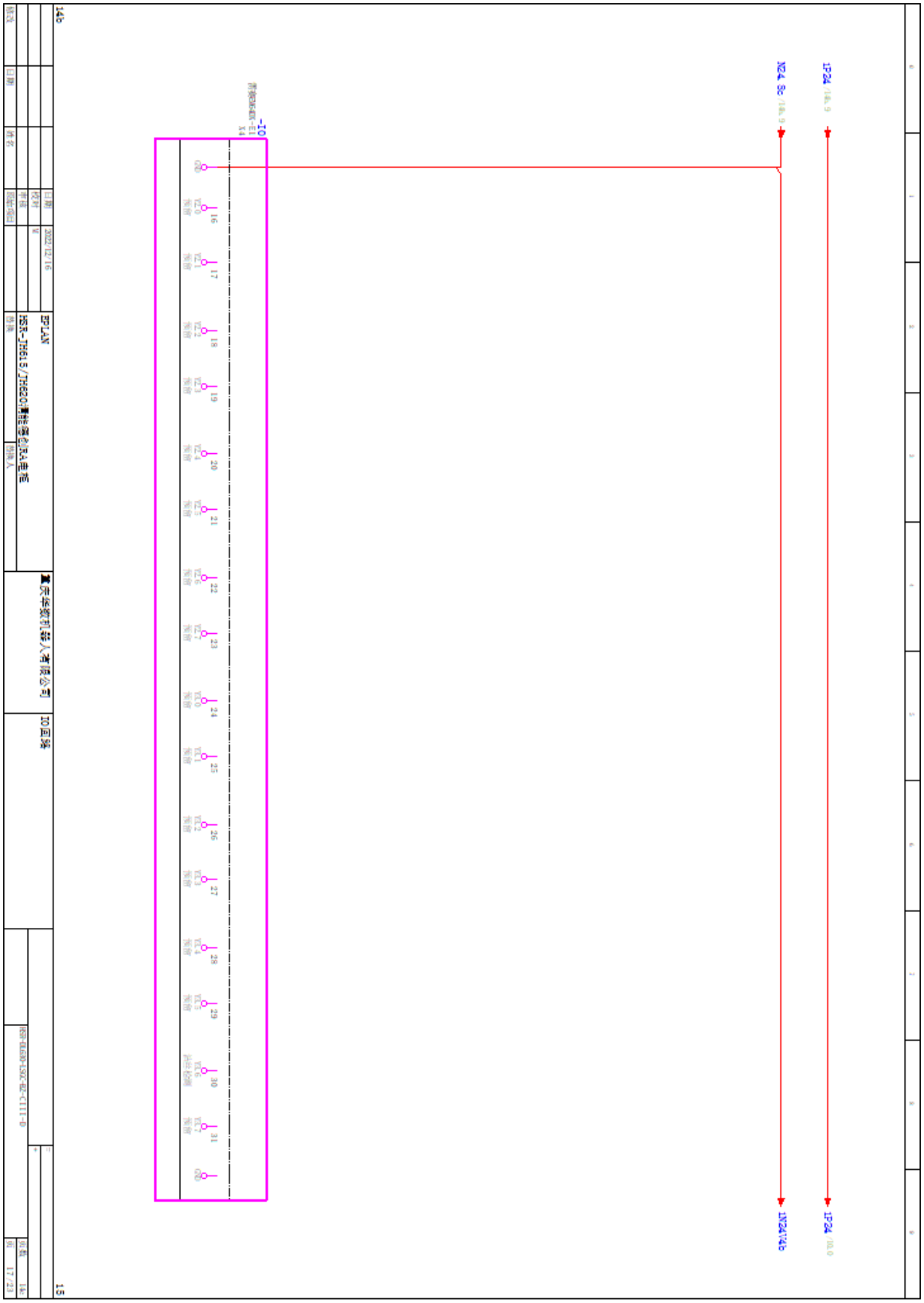

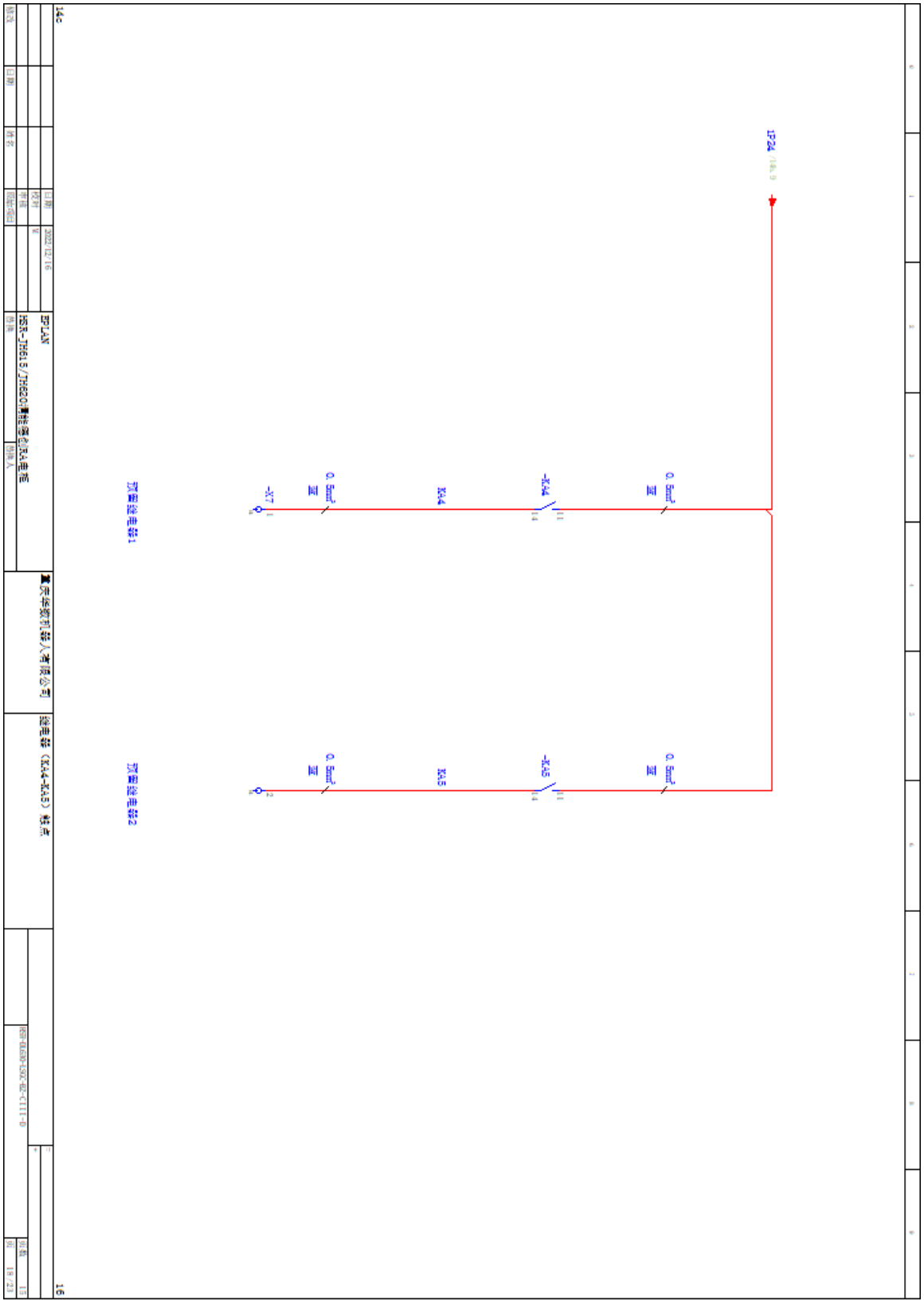
14c
EPLAN
HSR-JH615/JH620
16

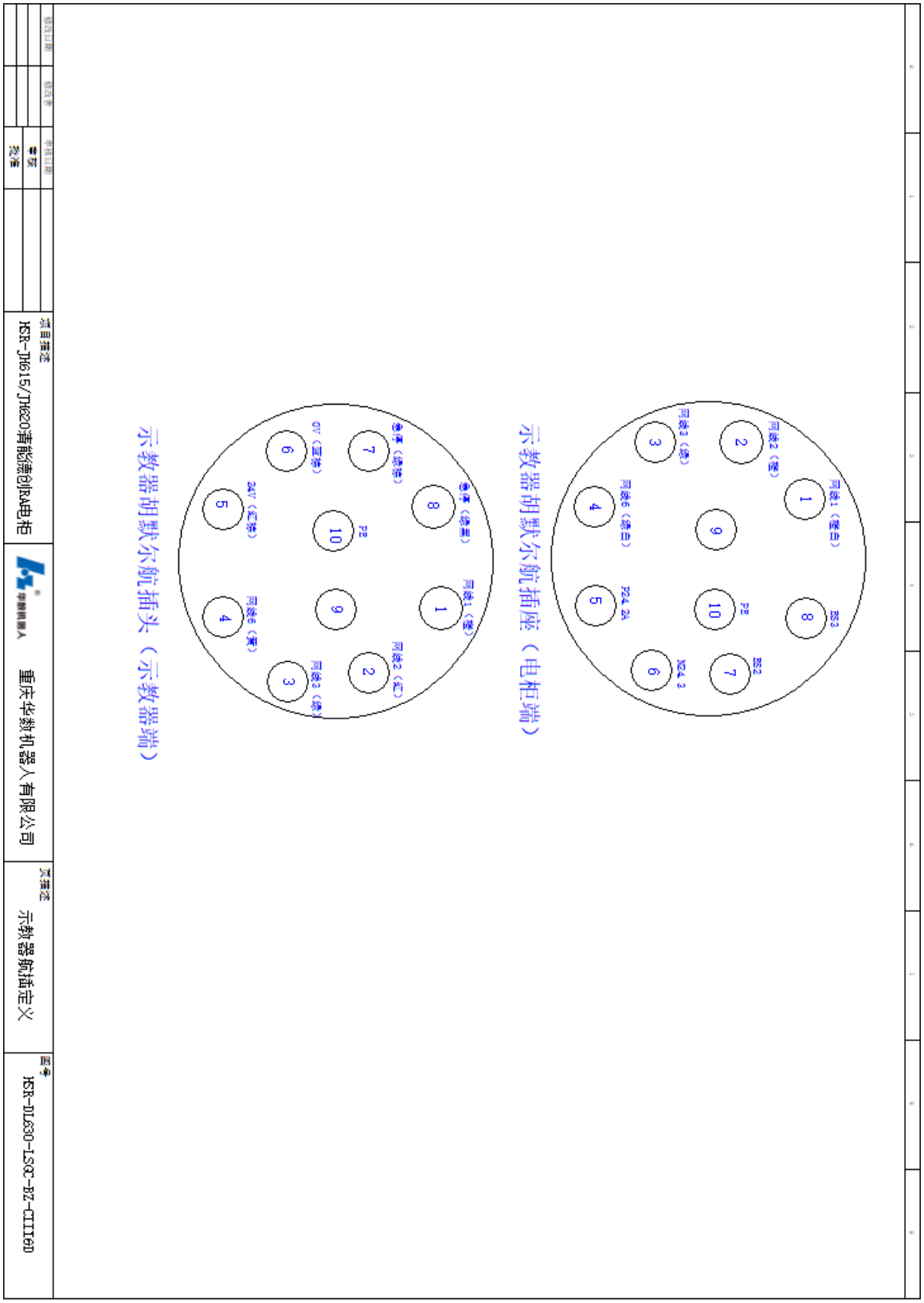
示教器胡默尔航插座（电柜端）
示教器胡默尔航插头（示教器端）
HSR-JH615/JH620清能德创R4电柜
重庆华数机器人有限公司
示教器航插定义
HSR-DL630-LSQ-BZ-CIII60

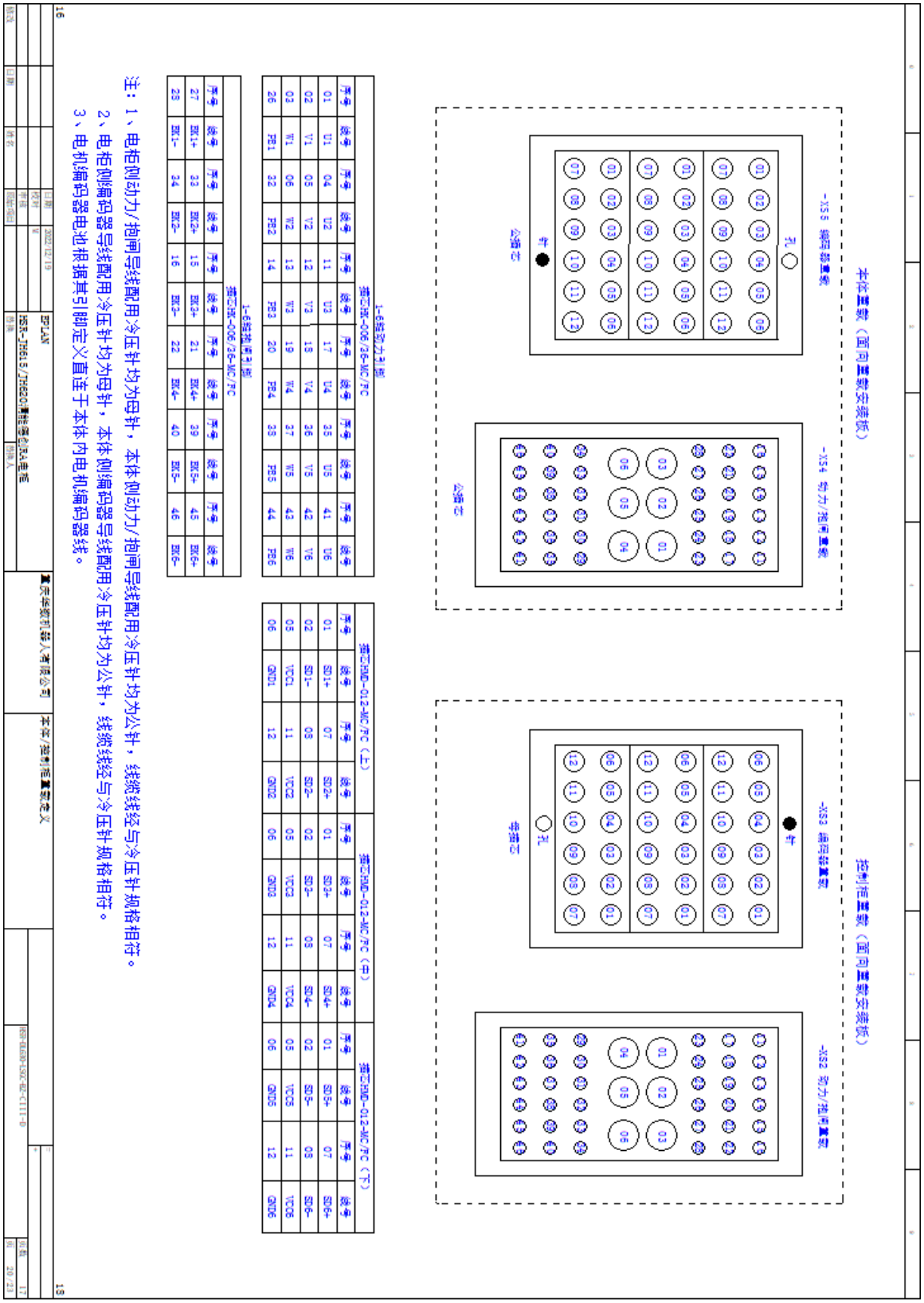
本体重载（面向重载安装板）
-XS5 编码器重载
-XS4 动力/抱闸重载
控制柜重载（面向重载安装板）
-XS3 编码器重载
-XS2 动力/抱闸重载
1-6轴动力引脚
1-6轴抱闸引脚
注：1、电柜侧动力/抱闸导线配用冷压针均为母针，本体侧动力/抱闸导线配用冷压针均为公针，线缆线经与冷压针规格相符。
2、电柜侧编码器导线配用冷压针均为母针，本体侧编码器导线配用冷压针均为公针，线缆线经与冷压针规格相符。
3、电机编码器电池根据其引脚定义直连于本体内电机编码器线。

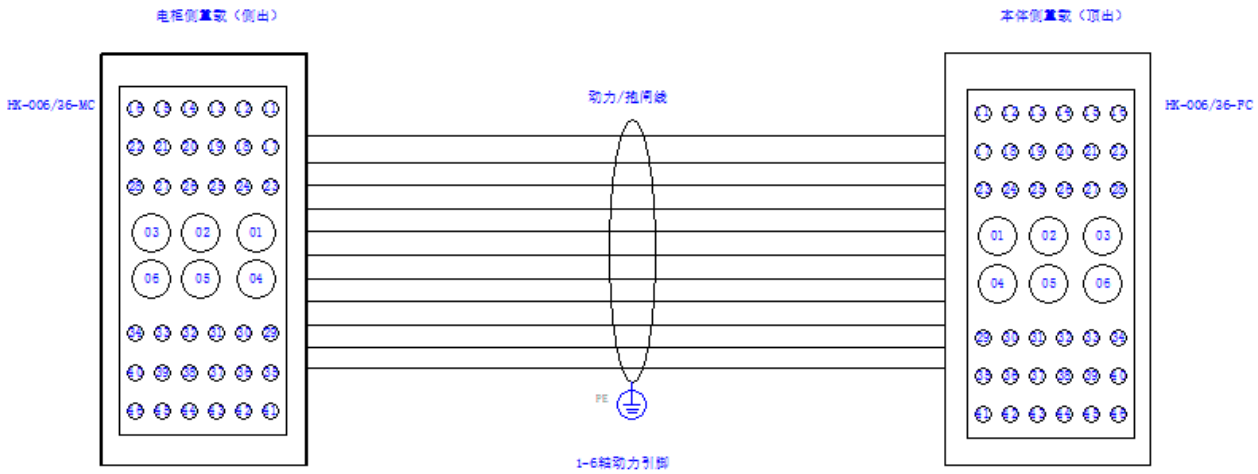

插芯HK-006/36-MC/FC											
序号	线号	序号	线号	序号	线号	序号	线号	序号	线号	序号	线号
01	U1	04	U2	11	U3	17	U4	35	U5	41	U6
02	V1	05	V2	12	V3	18	V4	36	V5	42	V6
03	W1	06	W2	13	W3	19	W4	37	W5	43	W6
26	PE1	32	PE2	14	PE3	20	PE4	38	PE5	44	PE6

1-6轴抱闸引脚

插芯HK-006/36-MC/FC											
序号	线号	序号	线号	序号	线号	序号	线号	序号	线号	序号	线号
27	EK1+	33	EK2+	15	EK3+	21	EK4+	39	EK5+	45	EK6+
28	EK1-	34	EK2-	16	EK3-	22	EK4-	40	EK5-	46	EK6-

注：1、根据连接线两端重载配置及定义对应配置电柜侧及本体侧重载（HK系列插芯配置CC、CD系列冷压针，1-2轴UVW三相采用CC系列、其余采用CD系列，线缆线经与冷压针规格相符）。

2、动力/抱闸固定线缆配置　线缆规格：6C×4+6C×2.5+12C*1.0+16Cx0.5SQ（线芯配置：动力线J1/J2--6C×4mm2、J1/J2轴PE--2C*2.5mm2、J3—4C×2.5mm2、J4/J5/J6—12C×1.0mm2，所有抱闸线—16C×0.5mm2），线缆长度：8米。

17 19

			日期	2022/12/19	EPLAN	重庆华数机器人有限公司	本体-控制柜动力/抱闸连接线缆	
			校对	M	HSR-JH615/JH620清能德创RA电柜			
			审核					
修改	日期	姓名	原始项目		替换	替换人		页数 18
								页 21/23

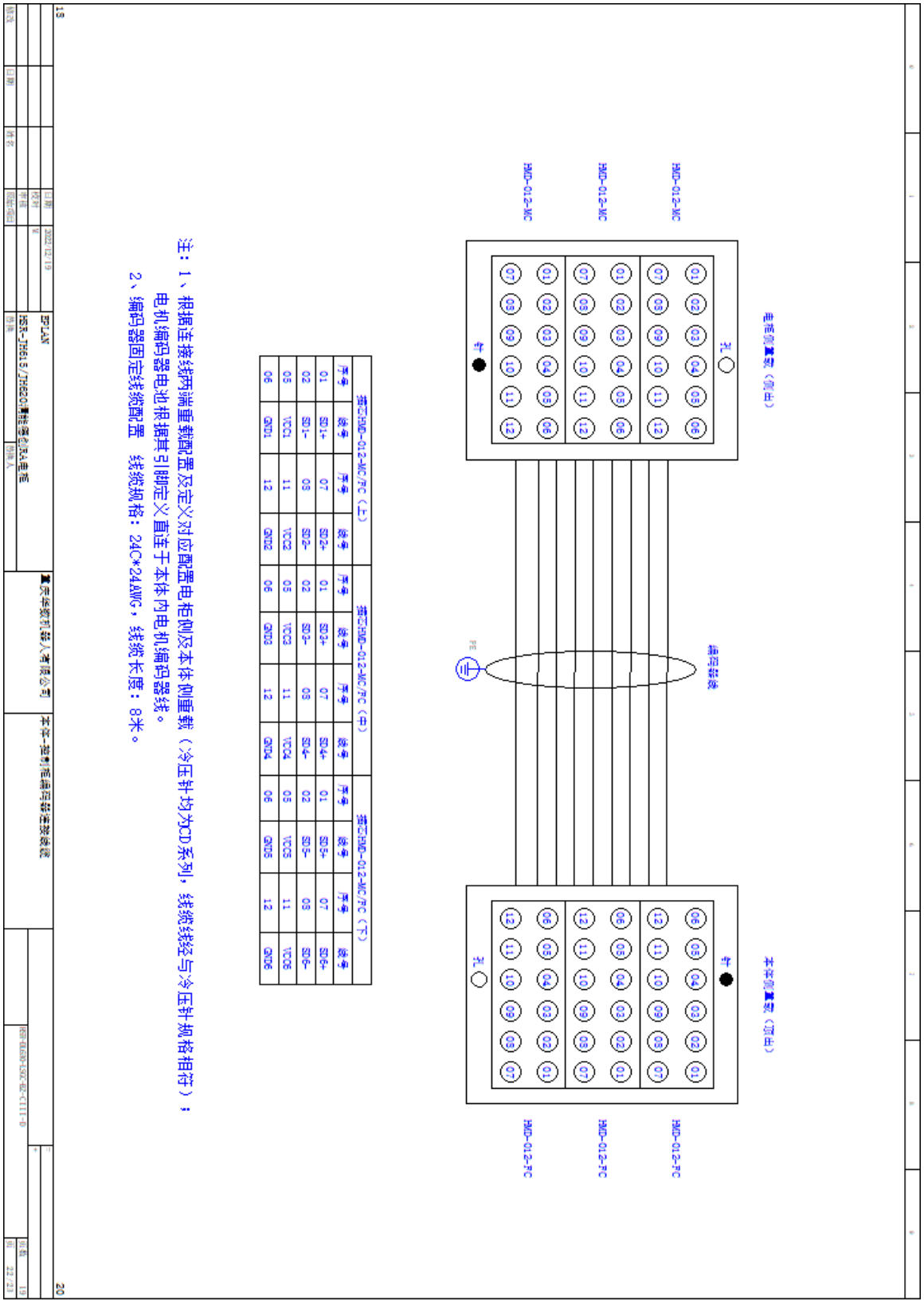

注：1、根据连接线两端重新配置及定义对应配置电柜侧及本体侧重新（冷压针均为CD系列，线缆线径与冷压针规格相符）；
电机编码器电池根据其引脚定义直连于本体内电机编码器线。
2、编码器固定线缆配置 线缆规格：24C*24AWG，线缆长度：8米。

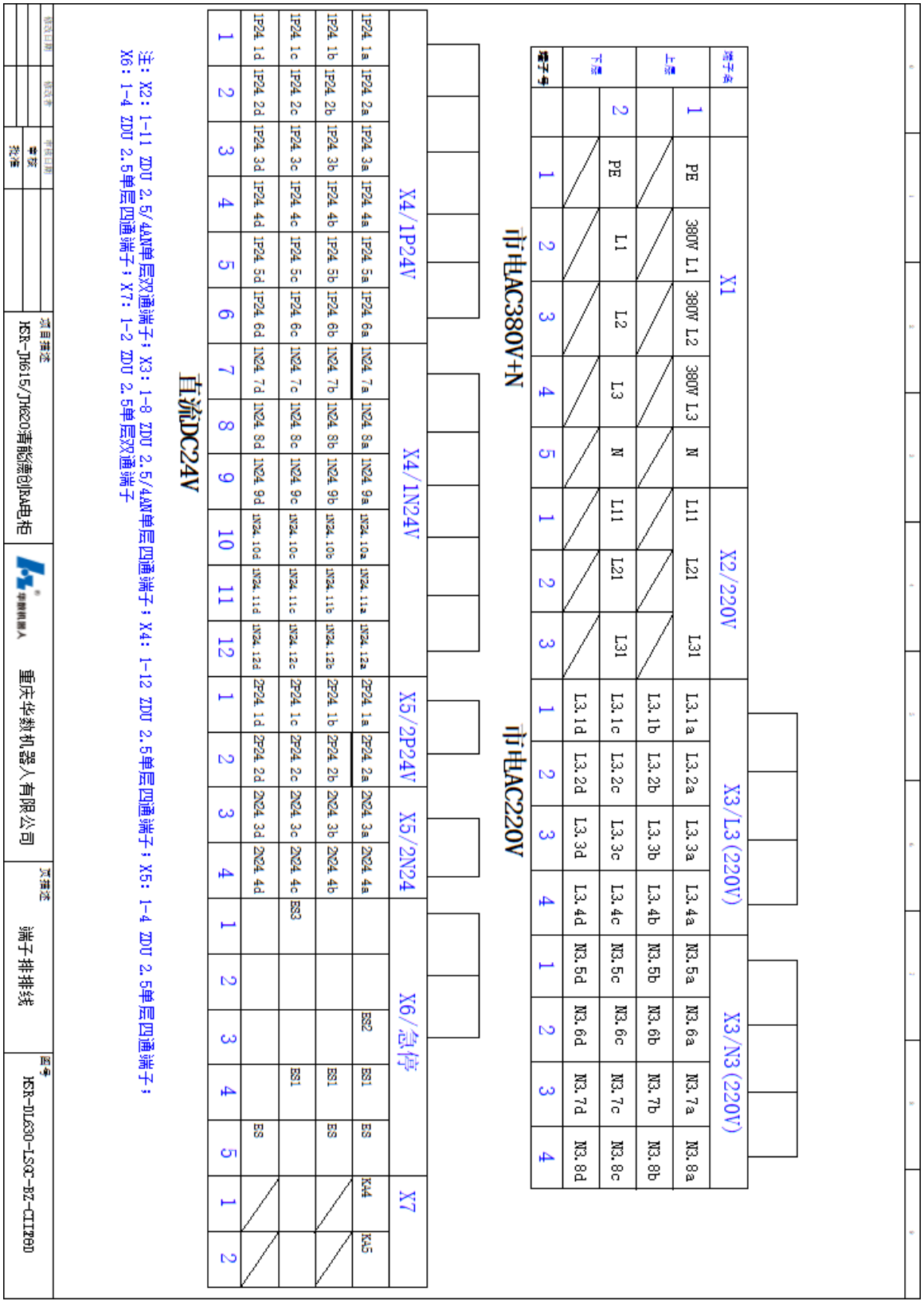

端子名		X1					X2/220V			X3/L3(220V)				X3/N3(220V)			
上层	1	PE	380V L1	380V L2	380V L3	N	L11	L21	L31	L3.1a	L3.2a	L3.3a	L3.4a	N3.5a	N3.6a	N3.7a	N3.8a
										L3.1b	L3.2b	L3.3b	L3.4b	N3.5b	N3.6b	N3.7b	N3.8b
下层	2	PE	L1	L2	L3	N	L11	L21	L31	L3.1c	L3.2c	L3.3c	L3.4c	N3.5c	N3.6c	N3.7c	N3.8c
										L3.1d	L3.2d	L3.3d	L3.4d	N3.5d	N3.6d	N3.7d	N3.8d
端子号		1	2	3	4	5	1	2	3	1	2	3	4	1	2	3	4

市电AC380V+N　　市电AC220V

X4/1P24V						X4/1N24V						X5/2P24V		X5/2N24		X6/急停					X7	
1P24.1a	1P24.2a	1P24.3a	1P24.4a	1P24.5a	1P24.6a	1N24.7a	1N24.8a	1N24.9a	1N24.10a	1N24.11a	1N24.12a	2P24.1a	2P24.2a	2N24.3a	2N24.4a			ES2	ES1	ES	KA4	KA5
1P24.1b	1P24.2b	1P24.3b	1P24.4b	1P24.5b	1P24.6b	1N24.7b	1N24.8b	1N24.9b	1N24.10b	1N24.11b	1N24.12b	2P24.1b	2P24.2b	2N24.3b	2N24.4b				ES1	ES		
1P24.1c	1P24.2c	1P24.3c	1P24.4c	1P24.5c	1P24.6c	1N24.7c	1N24.8c	1N24.9c	1N24.10c	1N24.11c	1N24.12c	2P24.1c	2P24.2c	2N24.3c	2N24.4c	ES3			ES1			
1P24.1d	1P24.2d	1P24.3d	1P24.4d	1P24.5d	1P24.6d	1N24.7d	1N24.8d	1N24.9d	1N24.10d	1N24.11d	1N24.12d	2P24.1d	2P24.2d	2N24.3d	2N24.4d					ES		
1	2	3	4	5	6	7	8	9	10	11	12	1	2	3	4	1	2	3	4	5	1	2

直流DC24V

注：X2：1-11 ZDU 2.5/4AN单层双通端子；X3：1-8 ZDU 2.5/4AN单层四通端子；X4：1-12 ZDU 2.5单层四通端子；X5：1-4 ZDU 2.5单层四通端子；
X6：1-4 ZDU 2.5单层四通端子；X7：1-2 ZDU 2.5单层双通端子

修改日期	修改者	审核日期		项目描述		页描述	图号
		审核		HSR-JH615/JH620清能德创RA电柜	华数机器人 重庆华数机器人有限公司	端子排排线	HSR-DL630-LSGC-BZ-CIIT20D
		批准					

产品保修卡

Product Warranty Card

用户名称：_____

User Name: _____

产品型号：_____ 铭牌号：_____

Product Model: _____ Nameplate number: _____

签收日期：_____

Date of receipt: _____

（ 以 上 由 用 户 填 写 The above should be filled by user）

附 录 Exhibit:

我公司产品保修一年，保修期内，如果由于用户使用不当造成的损坏，我公司将按超保修期处理。超保修期后，如产品寄回我公司维修，只收取材料费和维修费：如本公司工程人员到现场维修，将收取材料费，差旅费和维修费，具体维修费请咨询我司售后服务部。

Our company's products are guaranteed for one year. During the warranty period, if the product is damaged by improper use of the user, our company will handle it as out-of-warranty period. In out-of-warranty condition, if the products are sent back to our company for maintenance, only the material fee and maintenance fee will be charged. If there is need of field maintenance by engineers of our company, the material fee, travel fee and maintenance fee will be charged. For specific maintenance costs, please consult our After-Sales Service Department.

华数机器人有限公司

Huashu Robotics Co., Ltd.

售后服务部

After-Sales Service Department

注意事项：

Notes:

1、本产品受版权保护，在未得到本公司授权的情况下，不得向第三方透露我公司产品

1. The product is protected by copyright. The software and hardware technical data of the product shall not be disclosed to third parties without authorization of our company.

的软 硬件技术资料。

...

2、不得在我公司未授权的情况下，拆卸或修改本产品的软，硬件。

2. The software and hardware of this product shall not be disassembled or modified without authorization of our company.

3、按合同要求，按时支付产品货款。

3. Pay for the product on time as required in the contract.

此卡与发票并用。

Use this card with invoice.

年　　月　　日

MM/DD/YY

此卡一定交到最终用户处，并由最终用户保存，以便于我公司为最终用户提供本产品的售后服务。

This card must be handed over to and kept by the end user, so that end user can enjoy after-sales service provided by our company.

售后服务联系方式

After-sales Service Contact Information

重庆华数机器人有限公司

Chongqing Huashu Robotics Co., Ltd.

地址：重庆市北碚区水土高新技术产业园云汉大道 5 号附 69 号

Add.: 69 attached to 5 Shuitu High and New Tech Industry Park, Beibei District, Chongqing City

邮编：400714

Zip code: 400714

客服电话：023-88026878

Service Tel.: 023-88026878

客服邮箱：service_cq@hzncc.com

Service e-mail: service_cq@hzncc.com

佛山华数机器人有限公司

Foshan Huashu Robotics Co., Ltd.

地址：广东省佛山市南海新区桃园东路 19 号

Add.: No. 19 Taoyuandong Road, Nanhaixin District, Foshan City, Guangdong Province

邮编：528234

Zip code: 528234

客服电话：0757-81991717

Service Tel.: 0757-81991717

客服邮箱：service_fs@hzncc.com

Service e-mail: service_fs@hzncc.com

维修记录

Maintenance Record.

维修时间 Maintenance Date	维修内容 Maintenance Content	维修人员签字 Maintenance Staff Signature

扫码了解更多
Scan the QR code for more information

中英官网：www.hsrobotics.cn
Official Chinese and English website: www.hsrobotics.cn
服务热线：400-9655-321
Service hotline: 400-9655-321

佛山华数机器人有限公司
Foshan Huashu Robotics Co., Ltd,
地址：广东省佛山市南海高新区桃园东路 19 号
Add.: 19 Taoyuandong Road, Nanhai High-tech Industry Development Zone, Foshan City, Guangdong Province
邮编：528234
Zip code: 528234
电话：0757-81991729
Tel.: 0757-81991729
传真：0757-81991726
Fax: 0757-81991726
Email：huashu@hzncc.com

重庆华数机器人有限公司
Chongqing Huashu Robotics Co., Ltd.
地址：重庆市北碚区水土云汉大道 5 号附 69 号
Add.: 69 attached to 5 Shuituyunhan Avenue, Beibei District, Chongqing City
邮编：400714
Zip code: 400714
电话：023-88026882
Tel.: 023-88026882
传真：023-88537332
Fax:023-88537332
Email：huashu@hzncc.com

深圳华数机器人有限公司
Shenzhen Huashu Robotics Co., Ltd.
地址：深圳市南山区高新园南区华中科技大学深圳产学研基地 A 座十一层 A1101-1103
Add.: A1101-1103, Floor 11, Block A, Research Institute of Huazhong University of Science and Technology in Shenzhen, South Zone, High-tech Industrial Park, Nanshan District, Shenzhen City
邮编：518000
Zip code: 518000
电话：0755-26733753
Tel.: 0755-26733753
Email：sz-adm@hzncc.com
Email: sz-adm@hzncc.com

泉州华数机器人有限公司
Quanzhou Huashu Robotics Co., Ltd.
地址：福建省泉州市经济技术开发区崇宏街 288 号
Add.: 288 Chonghong Street, Economic and Technological Development Zone, Quanzhou City, Fujian Province
邮编：362000
Zip code: 362000
电话：0595-28857688
Tel.: 0595-28857688
传真：0595-28857688
Fax: 0595-28857688
Email：quanzhou@hzncc.com